August 1999 • NREL/SR-520-27058

Subcontractor Report

Post-Lamination Manufacturing Process Automation for Photovoltaic Modules

Annual Technical Progress Report
15 April 1998—14 June 1999

M.J. Nowlan, J.M. Murach, T.W. McCormick,
E.R. Lewis, and S.J. Hogan
Spire Corporation
Bedford, Massachusetts

National Renewable Energy Laboratory
1617 Cole Boulevard
Golden, Colorado 80401-3393

NREL is a U.S. Department of Energy Laboratory
Operated by Midwest Research Institute • Battelle • Bechtel

Contract No. DE-AC36-98-GO10337

August 1999 • NREL/SR-520-27058

Post-Lamination Manufacturing Process Automation for Photovoltaic Modules

Annual Technical Progress Report
15 April 1998—14 June 1999

M.J. Nowlan, J.M. Murach, T.W. McCormick,
E.R. Lewis, and S.J. Hogan
Spire Corporation
Bedford, Massachusetts

NREL Technical Monitor: M. Symko-Davies

Prepared under Subcontract No. ZAX-8-17647-04

National Renewable Energy Laboratory

1617 Cole Boulevard
Golden, Colorado 80401-3393

NREL is a U.S. Department of Energy Laboratory
Operated by Midwest Research Institute • Battelle • Bechtel

Contract No. DE-AC36-98-GO10337

NOTICE

This report was prepared as an account of work sponsored by an agency of the United States government. Neither the United States government nor any agency thereof, nor any of their employees, makes any warranty, express or implied, or assumes any legal liability or responsibility for the accuracy, completeness, or usefulness of any information, apparatus, product, or process disclosed, or represents that its use would not infringe privately owned rights. Reference herein to any specific commercial product, process, or service by trade name, trademark, manufacturer, or otherwise does not necessarily constitute or imply its endorsement, recommendation, or favoring by the United States government or any agency thereof. The views and opinions of authors expressed herein do not necessarily state or reflect those of the United States government or any agency thereof.

Available to DOE and DOE contractors from:
Office of Scientific and Technical Information (OSTI)
P.O. Box 62
Oak Ridge, TN 37831
Prices available by calling 423-576-8401

Available to the public from:
National Technical Information Service (NTIS)
U.S. Department of Commerce
5285 Port Royal Road
Springfield, VA 22161
703-605-6000 or 800-553-6847
or
DOE Information Bridge
http://www.doe.gov/bridge/home.html

Printed on paper containing at least 50% wastepaper, including 20% postconsumer waste

TABLE OF CONTENTS

Page

1 INTRODUCTION 1
  1.1 Objective 1
  1.2 Approach 1
2 TECHNICAL DISCUSSION 4
  2.1 Task 1 - Design Definition 4
    2.1.1 Survey of PV Module Manufacturers 4
    2.1.2 Cost Justification Model 5
    2.1.3 Module Throughput Analysis 6
  2.2 Task 2 - Develop Buffer System 6
    2.2.1 Buffer Concept Comparison 6
    2.2.2 Buffer Development 11
  2.3 Task 3 - Edge Process Development 15
    2.3.1 Edge Trimming Process Development 16
    2.3.2 Edge Trimming Production Prototype Concept 22
    2.3.3 Edge Sealing and Framing Process Development 24
    2.3.4 Edge Sealing and Framing Production Prototype Concept 29
  2.4 Task 4 - Develop Integrated Test System 33
    2.4.1 Design Approach 33
    2.4.2 Sun Simulator Development 34
    2.4.3 Test System Automation Development 36
3 CONCLUSIONS 42
4 REFERENCES 44

LIST OF ILLUSTRATIONS

Page

1 Typical manual process sequence for post-lamination module manufacturing. 1
2 Program organization, Spire PVMaT Phase 5A2. 3
3 Annual module production capacity vs. module power for three cycle times on a single shift basis. 6
4 Storage buffer concepts 8
5 Preliminary lay out drawing for “pick-and-place on shelves” buffer 10
6 Preliminary lay out drawing for vertical stacker buffer 11
7 Automated vertical stacker buffer storage system. 12
8 Emergency stop cable location on buffer system 14
9 Completed SPI-BUFFER 350 during process evaluations 14
10 Module edge cross-sections after lamination, trimming, sealing, and framing 15
11 Spinning saw prototype setup for module trimming. 18
12 Top views of an EVA sheet, laser cut at 20 cm/s. 19
13 Top views of laminated modules with laser trimmed edges 20
14 Hot wire prototype setup for module trimming. 21
15 Hot knife prototype setup with graphite blade and untrimmed module. 21
16 Production edge trimming system concept. 23
17 Sealant adhesion test setup, aluminum to glass 26
18 Sealant adhesion test setup, aluminum to Tedlar. 27
19 Prototype corner key inserter (center) and sealant dispense head (left) 28
20 Prototype framer with laminate and frame sections loaded and ready for installation 29
21 Production edge sealing and framing system concept 30
22 SPI-SUN SIMULATOR 350i design 35
23 SPI-MODULE QA 350 integrated module test system 37
24 Hi-pot test carriage assembly. 38
25 Sun simulator carriage assembly 39
26 Main operating screen, SPI-MODULE QA 350, with I-V data measured by a sun simulator. 40
27 An example of an automated module production line with a network 43

LIST OF TABLES

Page

1 Program tasks. 2
2 Schedule for demonstrating new module process automation. 2
3 Assumptions for cost justification model, baseline case. 5
4 Summary of cost model results. 5
5 Storage buffer comparison. 9
6 Color code for machine status indicator lights. 13
7 Edge trimming process and estimated cycle time for a 91 cm x 46 cm module. 24
8 Representative sealant materials considered for edge sealing. 25
9 Butyl sealant strength test data, aluminum to glass. 26
10 Butyl sealant strength test data, aluminum to Tedlar. 27
11 Edge sealing and framing processes and estimated cycle times. 33
12 Uniformity and repeatability measurements, SPI-SUN SIMULATOR 350i. 36
13 User selectable parameters for hi-pot and ground continuity tests. 40

1 INTRODUCTION

This is Spire Corporation's Annual Technical Progress Report for Phase 1 of a program entitled "Post-Lamination Manufacturing Process Automation For Photovoltaic Modules." This program was made possible by cost-share funding from the U. S. Department of Energy under National Renewable Energy Laboratory (NREL) subcontract No. ZAX-8-17647-04. The Phase 1 period was 14 months, from April 15, 1998 to June 14, 1999.

This program is part of Phase 5A2 of the Photovoltaic Manufacturing Technology (PVMaT) project. The Technical Monitoring Team members are Dr. Martha Symko (NREL), Dr. Michael Quintana (Sandia National Laboratories), and Mr. Steve Rummel (NREL).

1.1 Objective

Spire is addressing the PVMaT project goals of photovoltaic (PV) module cost reduction and improved module manufacturing process technology. New cost-effective automation processes are being developed for post-lamination PV module assembly, where post-lamination is defined as the processes after the solar cells are encapsulated. These processes apply to both crystalline and thin film solar cell modules. Four main process areas are being addressed:

- module buffer storage and handling between steps
- module edge trimming, edge sealing, and framing
- junction box installation
- testing for module performance, electrical isolation, and ground path continuity

Currently, little or no automation is used by PV module manufacturers for these post-lamination processes. A typical manual process sequence is shown in Figure 1. The development and implementation of automated systems are expected to result in significant labor cost savings, improved product quality, and increased throughput. A reduction in the occurrence of repetitive stress injuries may also be achieved by eliminating product lifting and manual edge trimming tasks.

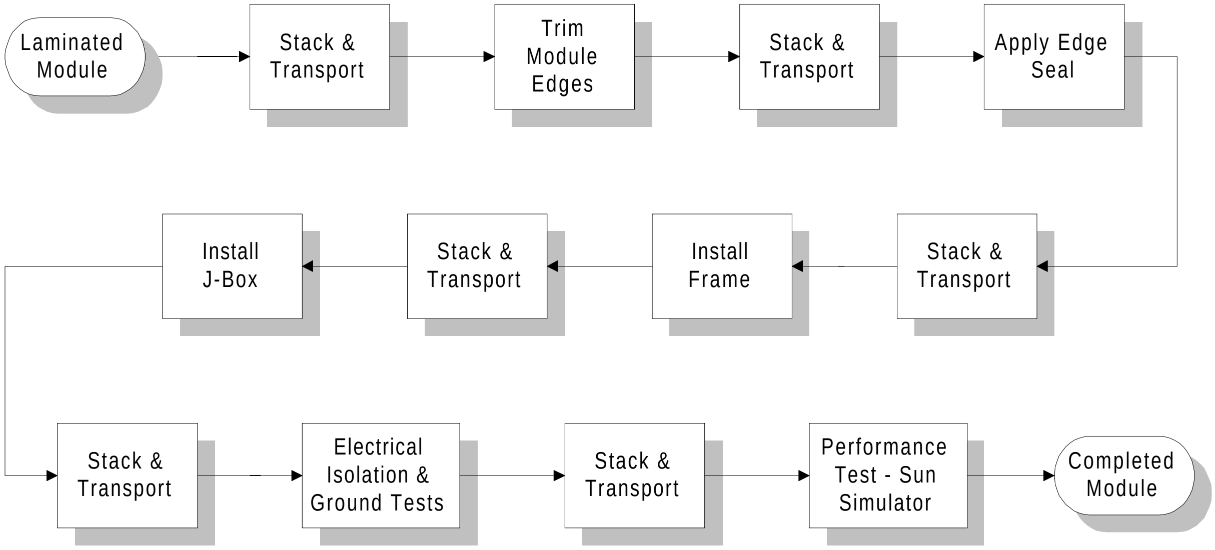
Laminated Module
Stack & Transport
Trim Module Edges
Stack & Transport
Apply Edge Seal
Stack & Transport
Install Frame
Stack & Transport
Install J-Box
Stack & Transport
Electrical Isolation & Ground Tests
Stack & Transport
Performance Test - Sun Simulator
Completed Module

Figure 1 Typical manual process sequence for post-lamination module manufacturing.

1.2 Approach

A three year, three phase program is planned for developing and demonstrating new automated systems for post-lamination PV module manufacturing processes. The systems are (1) a module buffer storage system, including conveyor loading/unloading and module storage, (2) an integrated edge processing system, with automated edge trimming, edge sealing, and framing capabilities, (3) a junction box installation system, and (4) an integrated module testing system that combines electrical isolation testing, ground continuity testing, and module performance testing. Program tasks are listed in Table 1.

Table 1 Program tasks.

Phase	Task
1 - April 98 to June 99	1 - Design Definition 2 - Develop Buffer System 3 - Edge Process Development 4 - Develop Integrated Test System
2 - June 99 to June 00	5 - Design Integrated Edge Process System 6 - Fabricate Integrated Edge Process System
3 - June 00 to June 01	7 - Junction Box Process Development 8 - Develop Junction Box Installation System

As the prototype automation systems are developed, they will be evaluated with module components from several module manufacturers. The schedule for demonstrating these systems is provided in Table 2.

Table 2 Schedule for demonstrating new module process automation.

Automated Process	Schedule
• Module buffer storage with conveyor load/unload	Phase 1, June 1999
• Trim module edges, apply edge seal, and install frame	Phase 2, June 2000
• Install junction box, module leads, and diodes	Phase 3, June 2001
• Transport, probe, and test modules for electrical isolation, ground continuity, and performance (I-V curve)	Phase 1, June 1999

Spire assembled a team for implementing this program that includes several major US module producers and the Automation & Robotics Research Institute (ARRI) at the University of Texas at Arlington (UTA). Program team members and their responsibilities are outlined in Figure 2.

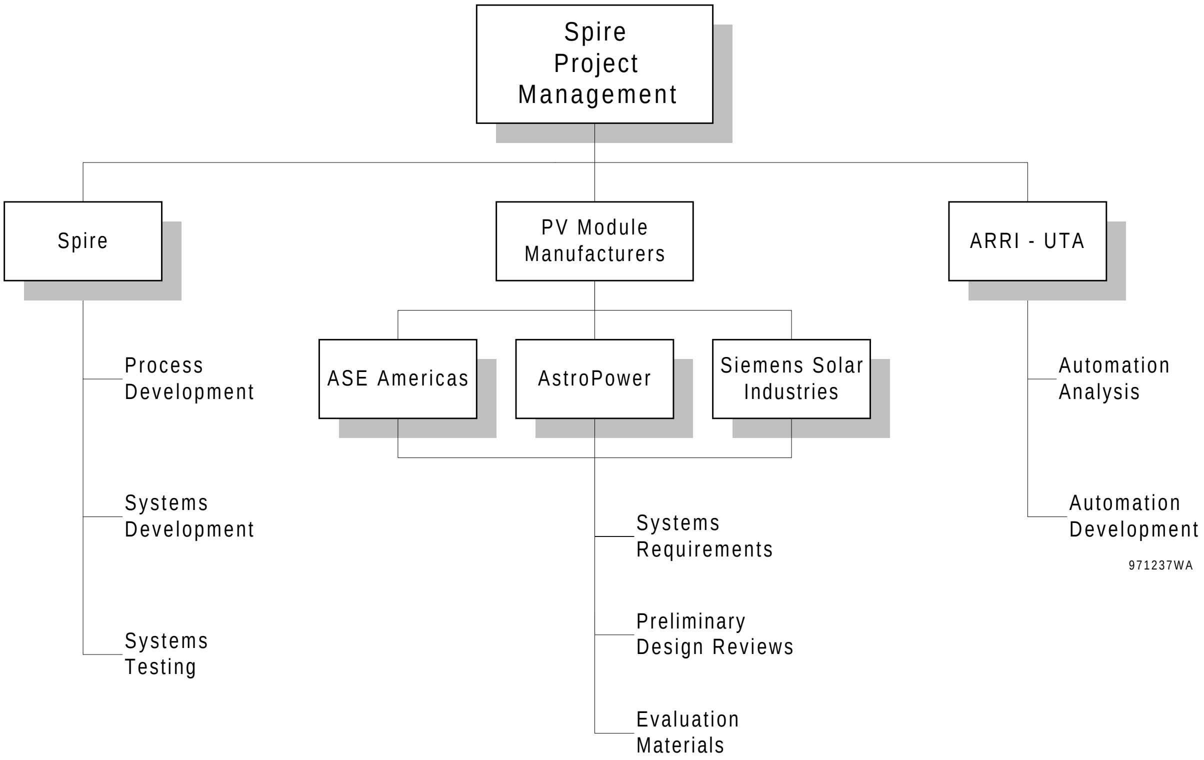
Spire Project Management
Spire
PV Module Manufacturers
ARRI - UTA
Process Development
Systems Development
Systems Testing
ASE Americas
AstroPower
Siemens Solar Industries
Systems Requirements
Preliminary Design Reviews
Evaluation Materials
Automation Analysis
Automation Development
971237WA

Figure 2 Program organization, Spire PVMaT Phase 5A2.

Major US module manufacturers that teamed with Spire in this effort include ASE Americas, Billerica, MA; AstroPower, Inc., Newark, DE; and Siemens Solar Industries, Camarillo, CA. These and other PV manufacturers provided information on their production requirements and feedback on Spire's systems designs. They also provided solar cell laminates and other module materials which Spire is using to evaluate the automated processes developed in the program.

2 TECHNICAL DISCUSSION

2.1 Task 1 - Design Definition

Activities completed under Task 1 include a survey of photovoltaic module manufacturers regarding post-lamination module processing and the development of a cost justification model to quantify the benefits of automation for these processes. This work is described in the following sections.

Spire, NREL, and ARRI met with PV module manufacturers ASE Americas, AstroPower, Siemens Solar Industries, and Solarex at the National Center for Photovoltaics Program Review Meeting in Denver, CO, in September, 1998, to discuss module manufacturing and automation as it relates to Spire's PVMaT program. The manufacturers were quite open in discussing their module designs and post-lamination processes. They are willing to consider implementing a common interface on junction boxes and frames to allow similar automated assembly techniques to be used. They agreed to send sets of module components (untrimmed laminate, edge sealant, frame, j-box, labels, fasteners) to Spire. These components, along with the survey data described in the following section, provided input for our automation design and development activities. After the survey was completed, a design definition document was written that defined the capabilities and specifications of the automation systems and provided guidelines for the detailed engineering and design work needed to develop these systems.[1]

2.1.1 Survey of PV Module Manufacturers

Spire conducted a survey of module manufacturers in the US and foreign countries to identify industry needs and practices for post-lamination module processing. This information was compiled and used to define the requirements for the new automated systems being developed in this program.

A survey questionnaire was formulated with questions in nine categories: module process sequence, facility requirements, module characteristics, product tracking, buffer storage, module edge processing, junction box assembly, module testing, and module labeling. The questionnaire was delivered to twenty major PV module manufacturers in the US, Europe, Japan, and Australia. Completed questionnaires were received back from nine companies, including seven in the US. These companies collectively produced 45 MW of PV shipments in 1997, approximately 36% of the world market.[2]

Individual company responses were kept confidential and pooled with the responses from other companies to create an industry profile. Spire delivered a survey report[3] to NREL and a paper based on this data was presented in September, 1998, at the National Center for Photovoltaics Program Review Meeting.[4]

Module assembly and testing processes were found to be similar among the manufacturers. Processes done by 75% or more of the respondents include module edge trimming, edge sealing, framing, junction box installation, tracking, labeling, and storing between processes. Testing done by 75% or more of the respondents includes performance (I-V) measurement, electrical isolation (hi-pot) test, and a ground continuity test. While the processes are similar, the process sequences varied considerably from manufacturer to manufacturer. It is concluded that automated processes must be modular so they can be done in any order.

Spire engineers also visited seven US PV manufacturers for detailed discussions on their needs for post-lamination process automation. The manufacturers were ASE Americas (Billerica, MA), AstroPower (Newark, DE), BP Solar (Fairfield, CA), Evergreen Solar (Waltham, MA), Siemens Solar Industries (Camarillo, CA), Solarex (Frederick, MD), and Solec International (Carson, CA).

The site visits and survey responses identified some module assembly and testing practices that had an impact on our automation design, including the following:

- All modules that are Underwriters Laboratory (UL) listed must pass both a hi-pot test and a ground continuity test.[5] We had initially planned to include a hi-pot test in the integrated test system, but not a ground continuity test. We added a ground continuity test capability to the hi-pot test station to meet the UL requirement.
- Some manufacturers do hi-pot and ground continuity tests immediately before measuring module performance with a sun simulator. This sequence allows integrating these three tests into one station, which was our original plan. However, others measure module performance before framing the module, and do the hi-pot and ground continuity tests after framing. Therefore, we designed the integrated tester with two separate operations, one for hi-pot and ground continuity testing and one for module performance measurements, so that we will have the flexibility to accommodate either process sequence.

2.1.2 Cost Justification Model

A cost justification model was developed by ARRI to quantify the benefits of automating the post-lamination module assembly and testing processes. ARRI personnel visited Siemens Solar and ASE Americas to gather manufacturing data on these processes. A generic model of operational costs was constructed from this data. The cost justification model used the Total Cost Minimum Annual Revenue Requirements approach to compare the cost of manual vs. automated module manufacturing. The model assumed a 5 MW per year production level on a single shift (40 hours per week) basis. Additional assumptions for the baseline case are listed in Table 3.

Table 3 Assumptions for cost justification model, baseline case.

Parameter	Value
Cost of capital	18.6%
Depreciation period - straight line	5 years
Pay back period	5 years
Tax rate	34%
Burdened labor rate	$30/hour
Module output per shift	5 MW/year

A summary of the model results is provided in Table 4. The model showed that $1.19 million of cost justification for automation is present in the post-lamination module processes when operating on a one shift per day, 5 MW per year basis, and $2.37 million on a two shift per day, 10 MW per year basis.

Table 4 Summary of cost model results.

	Cost Justification ($)		
Process	1 shift/day	2 shifts/day	Cost Savings
Edge trim with buffer	158,370	316,740	Reduced labor
Edge seal & frame with buffer	540,789	1,081,578	Reduced labor & material cost
J-box install with buffer	158,370	316,740	Reduced labor
Integrated tests with buffer	329,582	659,164	Reduced labor
Total	1,187,111	2,374,222	Reduced labor & material cost

Sensitivity analyses were done to examine the effects of the cost of capital, the pay back period, the cost of labor, and the number of operating shifts per day on the amount of capital equipment that can be justified. A detailed report on the model was prepared by ARRI for Spire and delivered to NREL.[6]

Automation can provide additional benefits that were not considered in the cost justification analysis because they are difficult to quantify. These include a reduction in the risk of repetitive stress injuries for edge trimming and module lifting tasks, and an ability to handle large area modules which are difficult for a single operator to handle.

2.1.3 Module Throughput Analysis

A key factor for justifying automation is cycle time, the amount of time a system takes to process a module, because it has a direct effect on production capacity. Spire did a module throughput analysis to determine the annual module production capacity as a function of cycle time and module power. The analysis assumed a one shift, 40 hour/week operation, 90% equipment uptime (i.e., 10% downtime allowance for adjustments and maintenance), and 99.7% yield for the processes after lamination. Annual throughput (MW) was calculated as a function of module power (W) for three cycle times: 60, 90, and 120 seconds/module. The results are shown in Figure 3. As expected, shorter cycle times and higher module power result in greater production capacity.

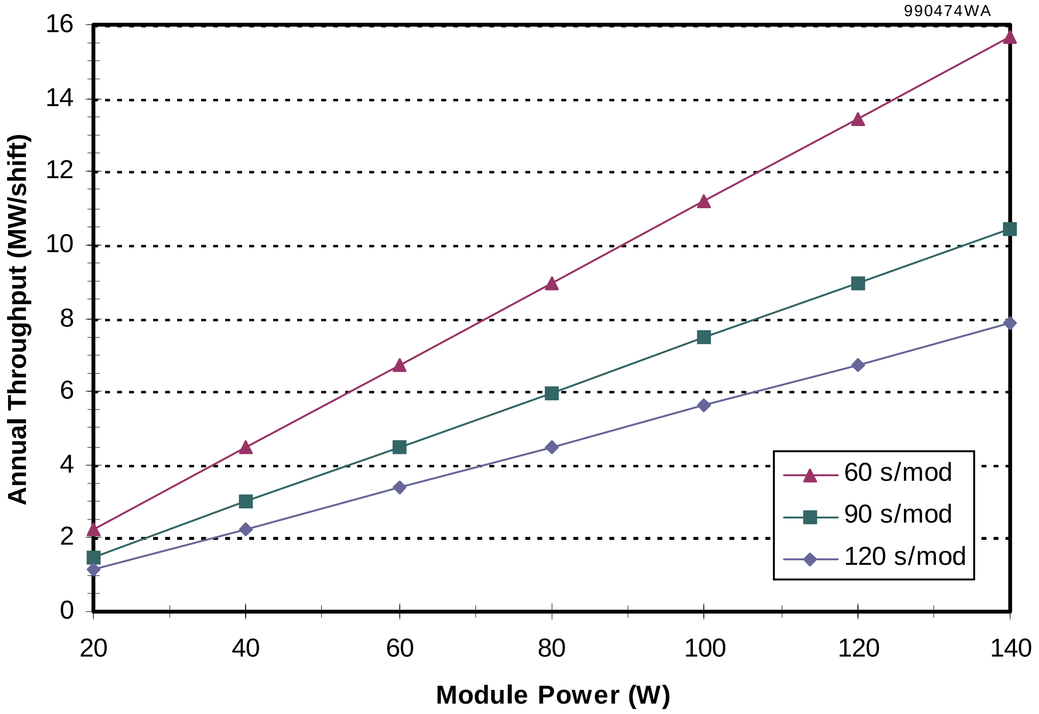

Figure 3 **Annual module production capacity vs. module power for three cycle times on a single shift basis.**

2.2 Task 2 - Develop Buffer System

Spire evaluated several buffer storage concepts for automatically transporting, storing, and retrieving laminates and framed modules between process steps. A vertical stacker concept was selected for detailed design and prototype fabrication, based on the simplicity of the mechanical design, the high density of storage, and the ability to use simple mobile storage carts.

2.2.1 Buffer Concept Comparison

Six alternative buffer storage concepts were identified. All of these concepts use conveyor loading and unloading for fully automated operation, and all allow product pass-through without storage to maximize throughput when the downstream process is available. They are all last in, first out buffers. The six concepts are:

- In-line elevator
- Off-line elevator
- Rotary storage
- Vertical stacker
- Pick & place onto pallet (horizontal stacker)
- Pick & place onto shelves

These concepts are illustrated in Figure 4 and described in the following paragraphs.

In-Line Elevator **-** In this concept, a number of empty shelves are stored below a roller conveyor. When product storage is desired, the conveyor stops when the product is at the proper position and a shelf passes through the conveyor to lift the product up above the conveyor surface. The shelf spacing must be designed to allow sufficient space between shelves for subsequent product to pass through on the conveyor. This approach uses the least amount of factory floor space of any of the six storage concepts.

Off-Line Elevator **-** This concept is similar to the previous concept except that a transfer conveyor moves product at a 90° angle from the main conveyor to load and unload an elevator. This design is slightly more complex than the first concept, due to the added transfer conveyor, but there is greater access to the product and to the buffer itself.

Rotary Storage **-** In this concept, a series of radial arms extends from a pivot point. A rotary motion moves the arms through the conveyor to lift product up for storage. While the mechanism for this storage concept is simple in principle, the storage capacity is quite low, especially for wide modules, since the space between modules increases along the length of the arms.

Vertical Stacker **-** The vertical stacker uses vacuum cups to grip the bottom surface of the product. The cups are mounted on arms that lift the product, rotate it slightly beyond 90°, and place it on a pallet or cart which has a vertical support. The first product leans against the support, while subsequent product leans against previously loaded product. Since no shelves are used, the packing density and the resulting storage capacity are high. Simple, mobile carts can be used for low-cost storage. There is a risk of product damage since the product is stacked on its edge and in contact with other product. This approach cannot be used if the product is an unframed module with a junction box, since the product is not flat.

Pick-and-Place Onto Pallet **-** A two-axis pick-and-place mechanism with vacuum cups moves product from a conveyor to a pallet or cart. The mechanism produces a horizontal stack of product. Like the vertical stacker, no shelves are used, so the packing density and the resulting storage capacity are high. Simple, mobile carts can be used for low-cost storage. There is a risk of product damage since the product is stacked in contact with other product. This approach cannot be used if the product is an unframed module with a junction box, since the product is not flat.

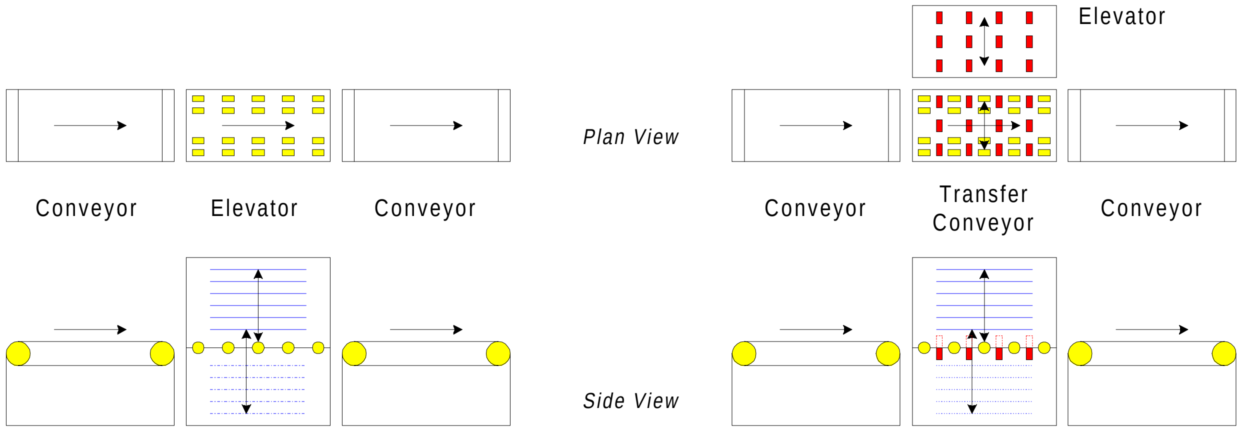
Elevator
Plan View
Conveyor
Elevator
Conveyor
Conveyor
Transfer Conveyor
Conveyor
Side View

1 In-Line Elevator **2 Off-Line Elevator**

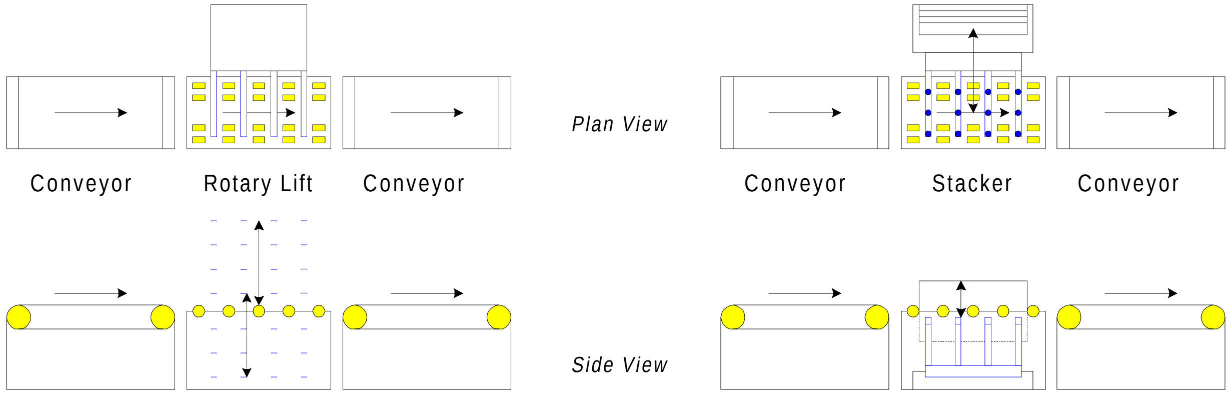
Plan View
Conveyor
Rotary Lift
Conveyor
Conveyor
Stacker
Conveyor
Side View

3 Rotary Storage **4 Vertical Stacker**

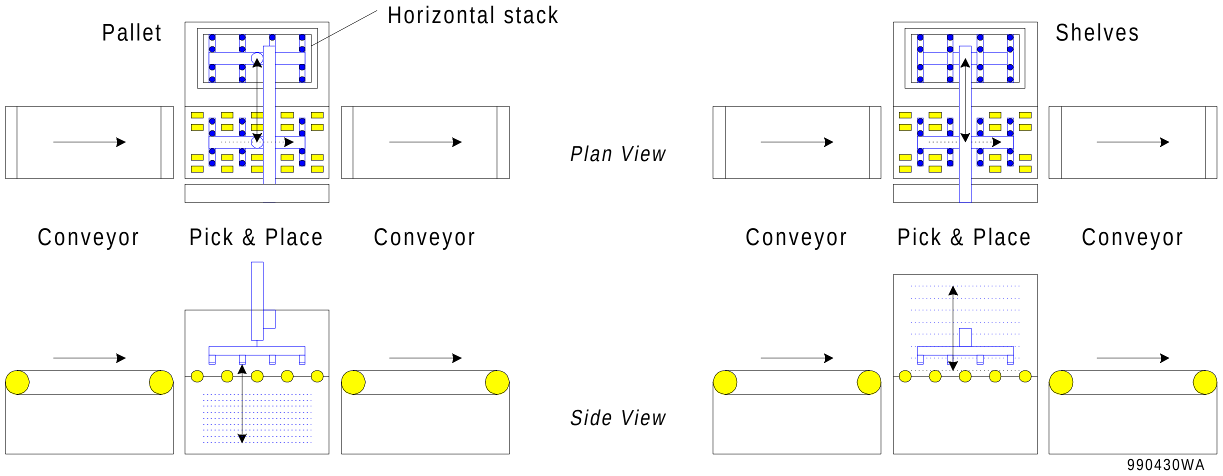
Pallet
Horizontal stack
Shelves
Plan View
Conveyor
Pick & Place
Conveyor
Conveyor
Pick & Place
Conveyor
Side View
990430WA

5 Pick & Place on Pallet **6 Pick & Place on Shelves**

Figure 4 Storage buffer concepts. Drawings not to scale.

Pick-and-Place Onto Shelves - This concept is similar to the previous one, except the two-axis pick-and-place mechanism places product onto shelves to prevent product damage and to allow the flexibility to handle all types of product. The storage capacity is not as high as in the previous concept, but simple shelves on casters can be used for low-cost, mobile storage.

Ten criteria were identified for comparing the attributes of each buffer concept. These criteria were applied to the six buffer concepts to obtain comparative ratings. The criteria are:

1. Storage capacity and density (number of modules per storage unit)
2. Complexity of motions: pneumatics, hydraulics, electric motors and their controls
3. Complexity, size, and mass of structural framework
4. Estimated cost (rough order of magnitude)
5. Facilities requirements: electricity, compressed air
6. Factory floor footprint
7. Operator access for manual load/unload of product
8. Portability/mobility of stored product
9. Potential for damage to product
10. Flexibility to handle framed and unframed modules, with and without junction boxes

The ten criteria were rated on a scale of 0 to 4, with 0 being poor and 4 being excellent, for each of the six buffer concepts, as shown in Table 5. An average rating was calculated for each buffer concept, assuming that each of the ten criteria have equal weight.

Table 5 Storage buffer comparison.

Storage Concept	1 Storage Capacity	2 Simple Motions	3 Simple Structure	4 Low Cost	5 Simple Facilities	6 Small Footprint	7 Product Access	8 Product Mobility	9 No Damage	10 Product Flexibility	Average Rating
1 In-Line Elevator	2	4	3	4	4	4	0	0	4	4	2.9
2 Off-Line Elevator	2	3	3	3	3	3	3	1	4	4	2.9
3 Rotary Storage	0	4	3	3	4	3	0	0	4	4	2.5
4 Vertical Stacker	4	3	2	3	3	3	4	4	2	1	2.9
5 Pick & Place on Pallet	4	3	3	3	3	3	4	4	2	1	3.0
6 Pick & Place on Shelves	2	3	3	3	3	3	3	4	4	4	3.2

Rating scale: 0 = Poor, 1 = Fair, 2 = Average, 3 = Good, 4 = Excellent

Caution must be exercised in interpreting the significance of the average rating. Module manufacturers are likely to place more importance on some of the rating criteria and less on others, depending on their specific needs. In addition, certain criteria that are important to one manufacturer may have little or no importance to another manufacturer. However, Table 5 does provide useful guidance for comparing the alternative concepts.

Concept 6, pick and place on shelves, achieved the highest average rating in Table 5, while concept 3, rotary storage, was the lowest. Given the low storage capacity of concept 3, this approach was rejected. Surveys and site visits indicated that product is often stored manually by an operator either in vertical stacks or horizontally, on shelves, analogous to concepts 4 and 6. Mobile storage in carts was seen to be an advantage by most manufacturers. Elevator storage designs (concepts 1 and 2) do not allow for mobile storage, due to the mechanized nature of the elevator. For these reasons, concepts 4 and 6 were selected for more detailed engineering study.

Work was completed on top-level designs, including preliminary lay-out drawings and process sequences, for concepts 4 and 6. The main components of the shelf buffer system (concept 6) are a conveyor for transporting modules, one or more module storage carts with shelves, and a carriage with grippers and actuators in x (horizontal) and z (vertical) directions for transporting modules from the conveyor to the cart and back. The design is shown in Figure 5.

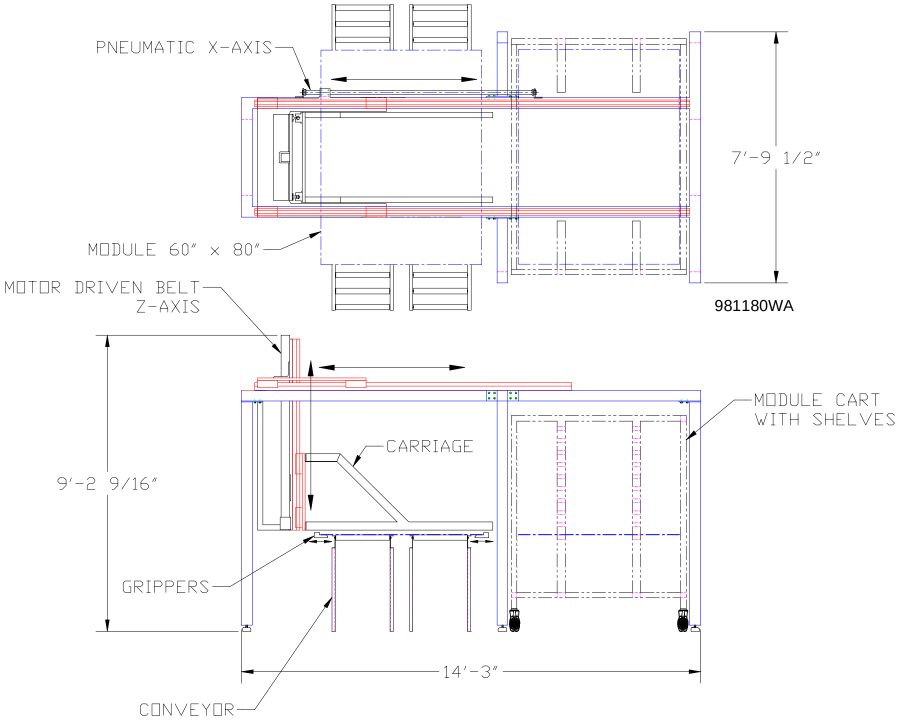

Figure 5 **Preliminary lay out drawing for "pick-and-place on shelves" buffer (concept 6). Top: plan view; bottom: side view.**

The transport carriage can use either mechanical grippers or vacuum cups for holding the module. The carriage is supported by linear rails with ball bushings in both x and z axes. The carriage height (z axis) is controlled by a motor driven belt that is programmed to pick and place modules at the conveyor height and at the height of each shelf in the cart. A pneumatic actuator moves the carriage between the conveyor and the cart (x axis) since only two positions are required in this direction.

The main components of the vertical stacker buffer system (concept 4) are a conveyor for transporting modules, one or more module storage carts for holding modules in vertical stacks, and a rotating pick-and-place mechanism for transferring modules from the conveyor to the cart and back. The preliminary design is shown in Figure 6.

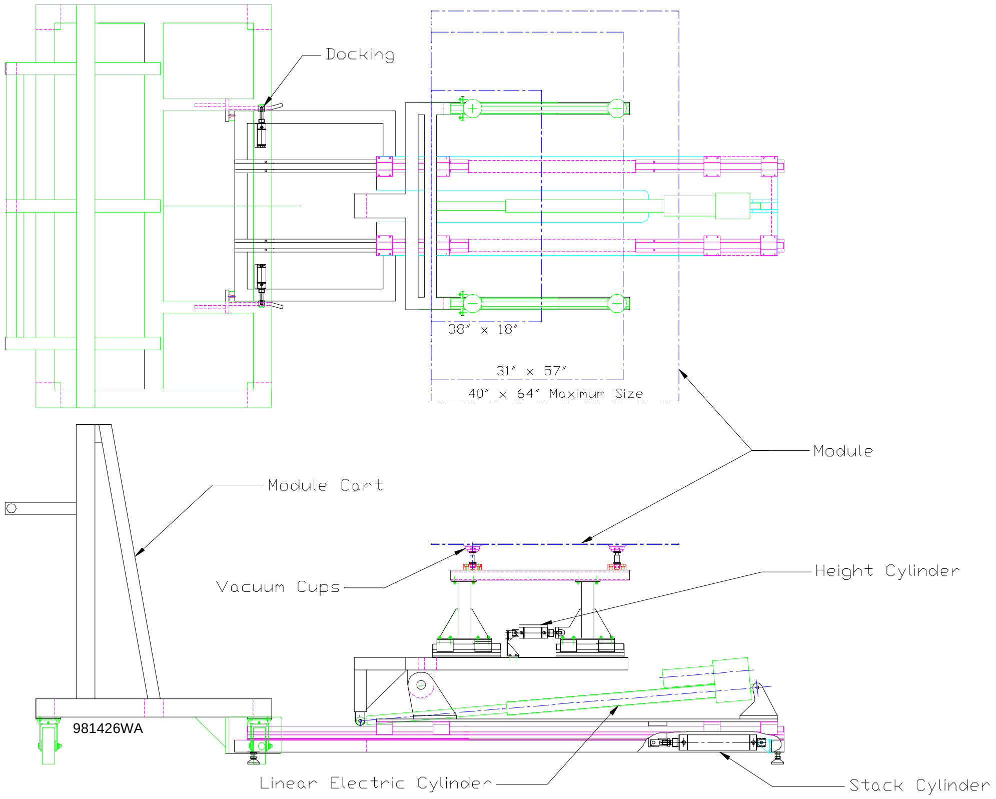

Figure 6 **Preliminary lay out drawing for vertical stacker buffer (concept 4). Conveyor and module aligner not shown for clarity. Top: plan view, with three module sizes indicated; bottom: side view.**

Carts with casters provide flexibility and mobility for stored product. Laminates or framed modules are stored in a vertical stack with high density, since there are no shelves or dividers to space the modules apart. This design works well with flat product, but it is not suitable for uneven product, such as a module with a junction box and no frame.

During the cart loading sequence, a module is first aligned on the conveyor and then a linear electric cylinder retracts, causing an arm to rotate about a pivot point. Four vacuum cups on the arm grip the module's bottom surface. The arm rotates approximately 100° to carry the module 10° beyond vertical, parallel to the module supports in the cart. A pneumatic cylinder (the stack cylinder in Figure 6) extends to press the module gently against the cart (or against previously placed modules in the cart), after which another cylinder (the height cylinder in Figure 6) retracts to lower the module down to the floor of the cart.

An engineering comparison of the two top-level designs indicated that the vertical stacker buffer design (Figure 6) is simpler and lower cost to produce than the pick-and-place on shelves design (Figure 5). The vertical stacker's storage carts are also simpler and lower cost, and they have a higher storage density because there are no shelves. Thus the vertical stacker concept was selected for detailed design and prototype fabrication.

2.2.2 Buffer Development

Spire developed detailed mechanical, pneumatic, electrical, and software designs for the vertical stacker approach for buffer storage. The main buffer subsystems are a conveyor for transporting modules into and out of the buffer, a module aligner for locating a module in the proper position before lifting it from the conveyor, one or more module storage carts for holding modules in vertical stacks, a rotating pick-and-place mechanism for transferring modules from the conveyor to the cart and back, and electrical, pneumatic, and software controls. The design is shown in Figure 7.

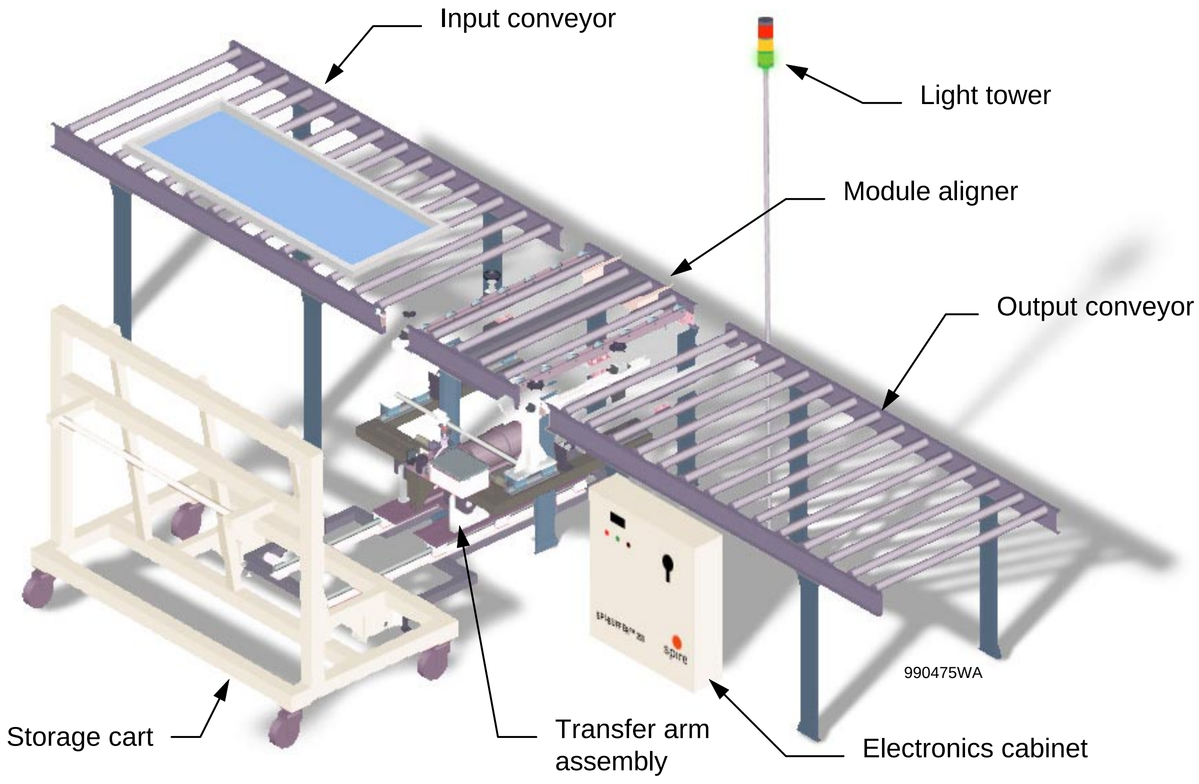

Figure 7 Automated vertical stacker buffer storage system.

Mechanical assembly drawings, detail drawings, and bills of material were created and reviewed, and parts were released for fabrication and procurement. A review of the specifications for the linear electric cylinder (shown in Figure 6) indicated that it was not rated for continuous duty operation, so a motor driven ball screw was substituted in its place.

The buffer was designed to handle modules from a minimum of 30 cm x 91 cm (12” x 36”) to a maximum of 102 cm x 162 cm (40” x 64”). Based on this size (approximately 3 ft x 5 ft), the system was designated the SPI-BUFFER^{TM} 350. Each cart has 51 cm (20”) of storage depth, equivalent to 10 framed modules with a frame depth of 5.1 cm (2.0”) or 100 laminates with a thickness of 5.1 mm (0.2”).

Electrical controls and sensors were selected and wiring schematics were created. A small programmable logic controller (PLC) with digital input and output (I/O) modules was selected to control the buffer. Analog I/O was avoided to minimize cost. Operating software in the PLC was programmed in relay ladder logic.

A light tower with red, yellow, and green lights was provided to indicate machine status. The buffer has six main states: run, reset, automatic pause, manual pause, error, and emergency stop. Colors were assigned for each state as listed in Table 6. These color codes are in compliance with the European standard for safety of machinery, EN 60204-1, which is required for machines sold into the member countries of the European Union.[7]

Table 6 Color code for machine status indicator lights.

Machine Status	Color
Emergency Stop	Red
Error	Yellow flash
Pause, manual	Yellow
Pause, automatic	Yellow and green
Reset	Green flash
Run	Green

The automatic control system uses sensors for sequencing, for preventing collisions, and for verifying normal machine operation. When a sensor indicates an error condition, the machine is set to the error state, the light tower displays a flashing yellow light, and an error code is displayed on a two-digit LED display on the control panel. The error code assists in diagnosing the cause of the error condition. Approximately 20 different error codes were identified and programmed.

An emergency stop push button and cable were provided for operator safety. Either the button or the cable can be used to interrupt machine operation if a situation occurs that is hazardous or may cause damage to the equipment or modules. The cable surrounds the three conveyor sections, as shown in Figure 8. When the cable is pulled or the button pressed, power is cut to both the conveyor motor and the transfer arm motor and compressed air is vented from the pneumatic system. Vacuum is maintained in this situation to prevent modules from falling from the transfer arm. This eliminates the chance of module breakage or operator injury from a falling module. After correcting the emergency stop condition, a reset button may be pressed to initiate the reset mode to return the buffer to its normal run state.

An electrical interface standard used by the Surface Mount Equipment Manufacturers Association (SMEMA) was selected to provide a standardized means for the buffer to communicate with upstream and downstream automation.[8] The SMEMA interface standard defines a protocol for electrical signals used for transferring product between machines. These signals allow local control, independent of a supervisory controller. This standard is being incorporated into all of the automated systems being developed in this program, allowing processes to be done in the order desired by the manufacturer, and allowing buffer systems to be inserted or removed at any point in a production line, as needed.

Assembly work on the prototype buffer was completed in April, 1999, including the assembly of mechanical, electrical, and pneumatic systems. A photo of the completed system is shown in Figure 9.

The buffer was powered up and electrical and pneumatic systems were checked out. The automation software running in the PLC was checked out step by step. Adjustments were made as required to various sensors, limit switches, pneumatic controls, and software.

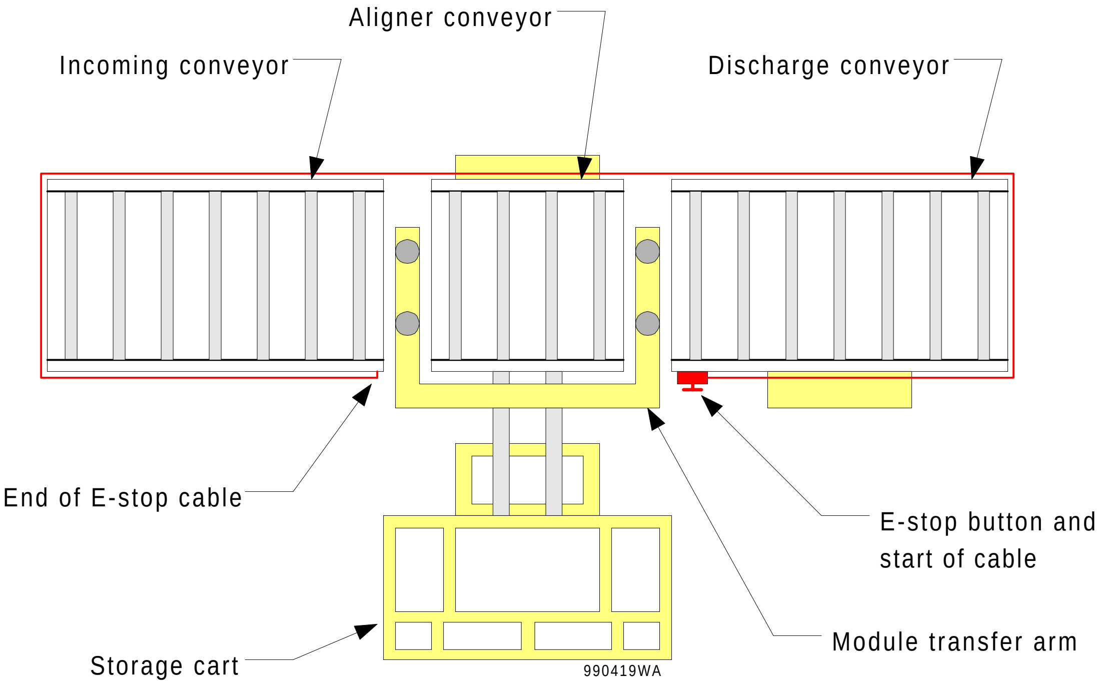
Aligner conveyor
Incoming conveyor
Discharge conveyor
End of E-stop cable
E-stop button and start of cable
Storage cart
Module transfer arm
990419WA

Figure 8 Emergency stop cable location on buffer system. Plan view, not to scale.

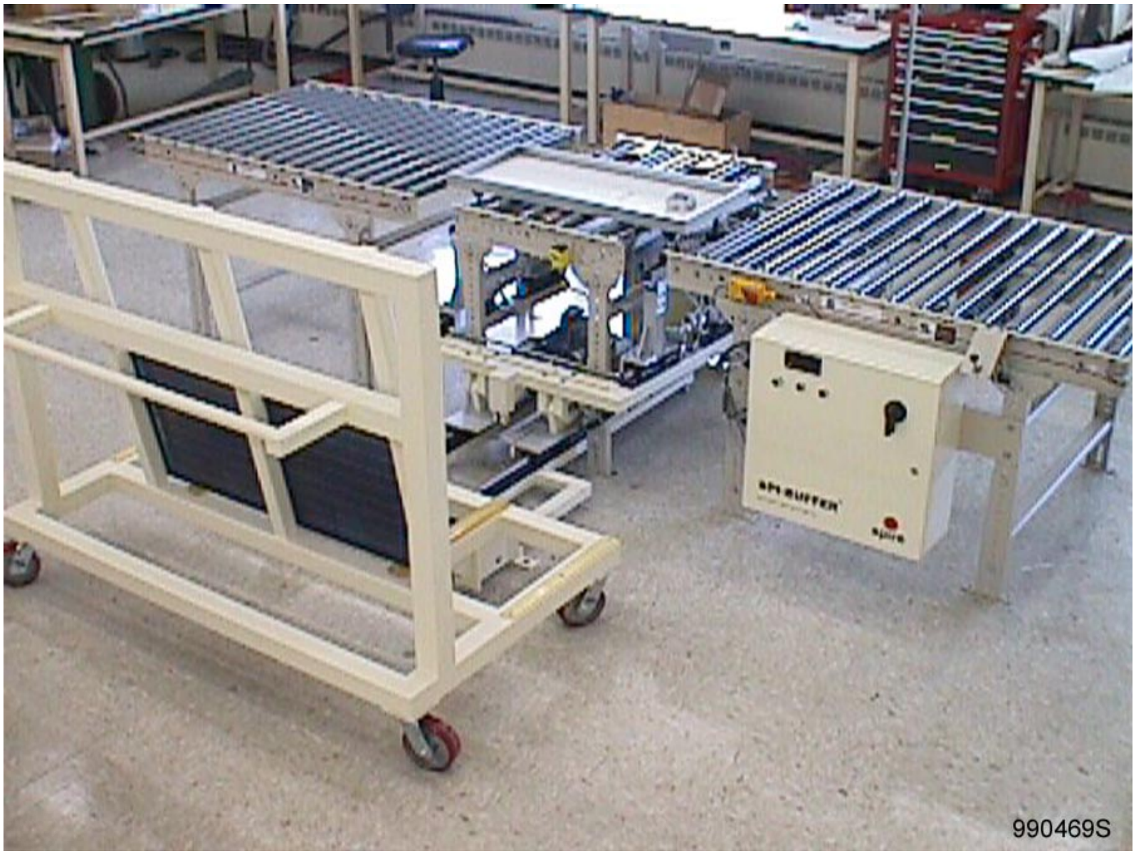

Figure 9 Completed SPI-BUFFER 350 during process evaluations.

Processes were demonstrated for the reset mode and three run modes: (1) aligning and transferring modules from the input conveyor to the storage cart, (2) transferring modules from the storage cart to the discharge conveyor, and (3) passing modules through, without storing in the cart. The specific run mode was determined automatically by the states of upstream and downstream automation, which was simulated by providing appropriate signals according to the SMEMA standard.

Cycle times were measured prior to process optimization. The cycle time for cart loading, which includes module alignment, was measured at 72 s, while cart unloading was measured at 60 s. The motor speed on the lift arm was increased and a number of sequencing changes were made in the software. As a result, the cycle times for both loading and unloading were reduced to approximately 47 s. These cycle times include approximately 150 cm of conveyor travel at a speed of 20 cm/s, which takes 7.5 s. At this speed, and given the 409 cm total length of the conveyor system, a module takes approximately 20 s to pass through the buffer without storage.

2.3 Task 3 - Edge Process Development

After module lamination, the laminate edges are trimmed, a sealant is applied to the edges, and a frame is installed. The edge trimming process removes excess encapsulant and back cover film from the module laminate edges and disposes of the excess material. The edge sealing process applies a sealant around the module edges by dispensing a bead of sealant in a channel in each module frame section. The sealant bead approach was selected over an edge tape sealant method due to lower sealant material cost and suitability to automation. The frame sections are attached to the module and joined at the corners with fasteners. An illustration of the edge processes is provided in Figure 10.

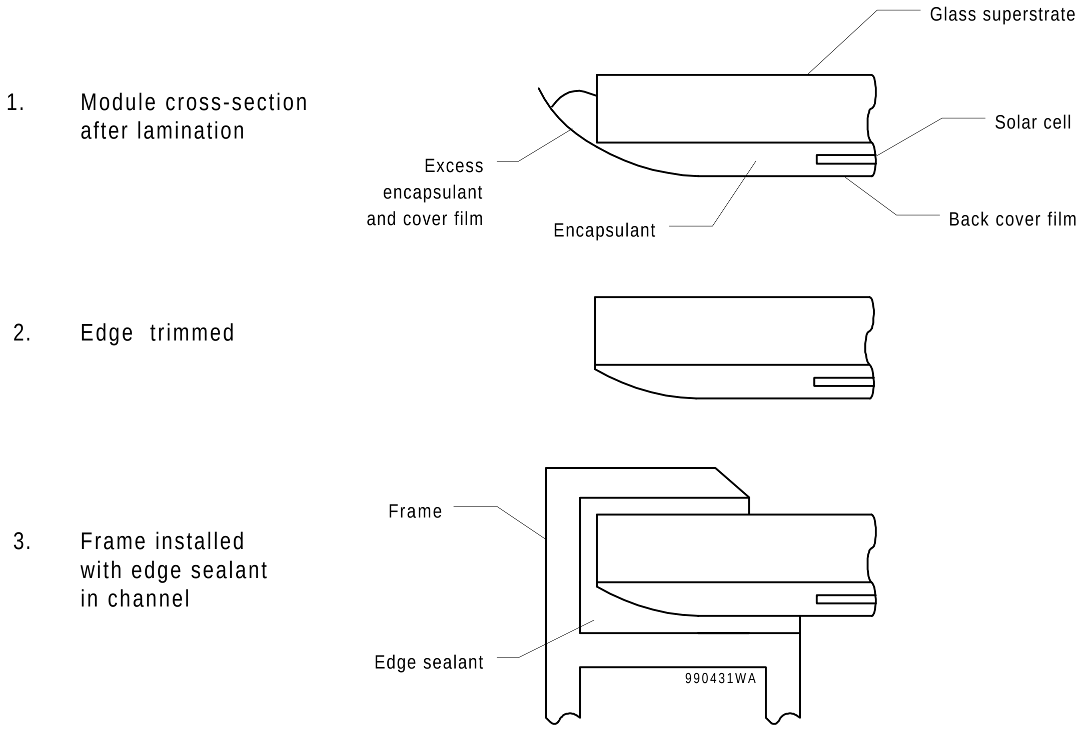
1. Module cross-section after lamination
Glass superstrate
Solar cell
Excess encapsulant and cover film
Encapsulant
Back cover film
2. Edge trimmed
3. Frame installed with edge sealant in channel
Frame
Edge sealant
990431WA

Figure 10 **Module edge cross-sections after lamination, trimming, sealing, and framing. Not to scale.**

ARRI developed and demonstrated module edge trimming, edge sealing, and framing processes that were designed for automation. Concepts for implementing these processes in production were defined. These concepts provide a solid basis for the prototype automation development work planned for Phase 2 of this program.

2.3.1 Edge Trimming Process Development

Excess encapsulant and back cover film extend beyond the glass edges after lamination, as shown in Figure 10. This material must be removed prior to applying an edge sealant. It became evident early in the development of the trimming process that two key areas must be addressed: edge sensing and edge trimming.

It is necessary to find the position and orientation of the glass edges prior to executing an automated trimming sequence. Both mechanical alignment and contact probing were considered but ruled out because of variations in the amount of encapsulant and cover film that hangs over the glass edge. A non-contact photoelectric sensor was evaluated for finding the glass edge. The sensor emits a beam of red light and measures the intensity of the light that is reflected back from the laminate. An intensity threshold can be set to trigger an output when the reflected light crosses the threshold.

Glass edge sensing tests were done at ARRI with laminates made at Spire. The laminates consisted of a 3.2 mm (1/8”) thick x 305 mm (12”) square glass superstrate, ethylene vinyl acetate (EVA) encapsulant, and white Tedlar® back cover film.[9] This construction is typical for the PV industry. The glass edges were swiped prior to lamination, as is customary, to remove the razor sharp edge left when the glass is cut. Swiping is done by sanding or grinding the glass to produce a slightly beveled edge. Tests showed that the sensor can reliably detect the transition between the flat surface of the glass and the glass edge.

Given the red color of the light used by the optical sensor, there was a question as to whether the sensor could see the glass edge if the module had a dark blue back cover instead of a white one. ARRI tested the sensor on a Solarex module with a dark blue back cover and found that the sensor worked adequately. The color of the back surface had a definite effect on the sensor reading, but sufficient change in the reflected light was observed to detect the glass edge.

Two approaches were considered for finding the glass edge: off-line sensing and in-line sensing. In the off-line method, sensing is done prior to edge trimming. A robotic arm moves the sensor across the glass edge near opposite ends of each side. The sensor threshold locations are recorded and used to determine the edge trimming path. In the in-line sensing method, edge sensing is used as feedback to guide the trimming path in real time. This technique would result in shorter cycle times, since there is no separate edge finding pass, and it may allow trimming closer to the glass edge. However, due to the additional equipment cost and complexity needed to develop a real-time control system, ARRI selected the off-line sensing method for the trimming prototype.

ARRI developed the edge sensing process on their Adept robot platform. An end effector was fabricated to mount the optical sensor on the end of the robot arm. Spire laminates with untrimmed edges were placed face down, in the same orientation as the lamination process, to eliminate the need to turn them over. The following procedure was successfully developed to determine the position and orientation of the glass:

1. A module is placed at a work cell with a nominal orientation and location, and the sensor is scanned across the module edges to find eight edge points, two per side.

2. An equation of a line defining each side of the glass is calculated from each pair of edge points found along a common side.

3. The location of each glass corner and the lengths of each side are determined by calculating the intersection of lines along adjacent edges.

4. Error checking is done to verify that the length of each side is within a selected tolerance and that the angle at each corner is 90°, within a selected tolerance.

A number of process variables were identified that impact the ability of the sensor to accurately determine the locations of the glass edges and consequently affect the quality of the trimmed edge:

- ***Glass edge straightness* -** The variance in glass edge straightness for the laminates provided by Spire was small enough that only eight edge points, two per edge, needed to be found to determine the location of the four edges with sufficient accuracy. A larger variance in edge straightness may require sensing more than two points per edge.

- ***Glass edge swipe* -** The optical sensor detects the transition between the front surface of the glass and its swiped (beveled) edge. During process development, the actual edge trimming path was set at an offset from this transition. Any variation in the size of the bevel will affect the location of the cutting path with respect to the glass edge.

- ***Sensing distance* -** The sensor was moved to a set distance perpendicular to the glass surface at the start of each edge point detection sequence during process development. This distance was held while the sensor was moved in a straight line across the glass edge. Inaccuracies in edge detection may be introduced if this distance is not maintained around all of the glass edges.

- ***Release sheet* -** The lamination process generally requires a release sheet to prevent encapsulant from adhering to the laminator. This release sheet must be removed prior to edge sensing.

- ***Encapsulant overflow* -** If encapsulant flows around the side of the glass and onto the front surface during lamination, it will obscure the reflection normally obtained from the front of the glass and the sensor will be unable to give an accurate reading for that edge point. Reasonable care in encapsulant size and placement prior to lamination should prevent this problem.

ARRI evaluated four different cutting technologies for edge trimming: spinning saw, laser, hot wire, and hot knife. The main objective was to produce a good quality cut at a speed that can achieve a cycle time of one minute per module. The Spire laminates with untrimmed edges used for the edge sensing tests were also used for the edge trimming tests.

The same cutting path was used for each cutting technology tested. This path was parallel to the glass edge, at an offset. The offset prevented the cutting tool from contacting the glass edge, to reduce wear on the tool and to prevent possible damage to the module. Each edge was trimmed in one pass, beginning just before the start of the edge and ending just after the end of the edge.

2.3.1.1 Spinning Saw Trimming

A prototype module trimming system was set up by attaching a grinder motor with a slitting saw blade to a robot arm, as shown in Figure 11. An optical sensor for finding the glass edge was also installed on the robot arm, below the saw blade. The off-line edge sensing method described previously was used to find the glass edge and calculate the cutting path.

A vacuum stage was designed and built to hold modules securely in a face down orientation during trimming. The stage allows access to the module edges for the optical sensor, which looks up at the glass from below, and for the cutting blade.

Testing showed that the spinning saw method can provide an adequate cut finish at the required trimming rate. Three different blade thicknesses were tried. The quality of cuts made with blade thicknesses of 0.51 mm and 0.81 mm deteriorated along the edge cutting pass as the EVA and Tedlar bound up against the side of the blade, reducing the blade's speed of rotation. A 2.0 mm wide blade with chip relief had less binding and a slightly improved finish. The finish was found to be a function of traverse speed. Good finishes were obtained at 6.4 cm/s, while at 13 cm/s, the speed needed to obtain the desired throughput, the finish was fair, showing an increase in surface roughness. At higher speeds, the saw tended to tear the material instead of shearing it, resulting in a poor finish.

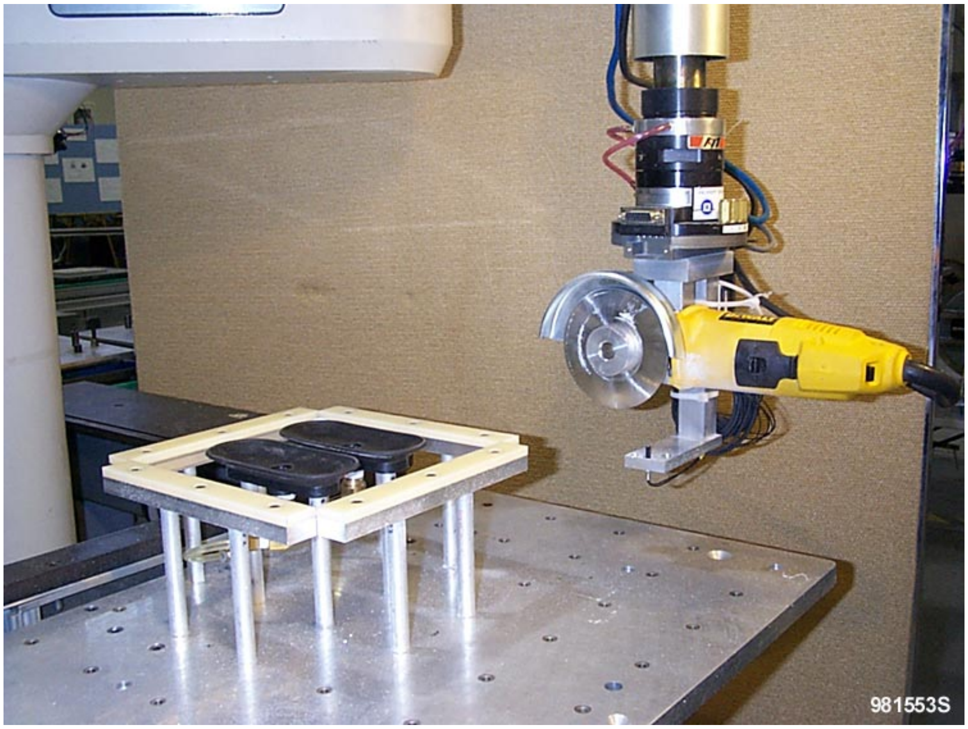

Figure 11 Spinning saw prototype setup for module trimming.

Three disadvantages were identified for the spinning saw technique. First, it was observed that when the EVA did not extend past the edge of the glass, the blade bent the protruding Tedlar instead of cutting it, making this approach unsuitable for trimming modules without EVA overhang. Second, significant amounts of EVA and Tedlar debris were generated by the cutting action. The debris would require an extra cleaning process for modules. Third, a large (~3 mm) offset is needed to ensure that the blade does not contact the module edge. The cutting blade will easily damage the module if contact is made. A large offset is required due to vibrations in the cutting tool and wobble in the blade. In addition, if there is a sensor error that causes the blade to contact the glass, the module will be damaged. For these reasons, the spinning saw approach is a poor candidate for the module trimming process.

2.3.1.2 Laser Trimming

Samples of EVA, Tedlar, and a laminated module with untrimmed edges were sent to a laser cutting shop for trimming tests. Figure 12 shows a sample of EVA that was trimmed at a rate of 20 cm/s, exceeding the nominal production rate goal. The trimmed edges are only slightly rough and have an acceptable appearance.

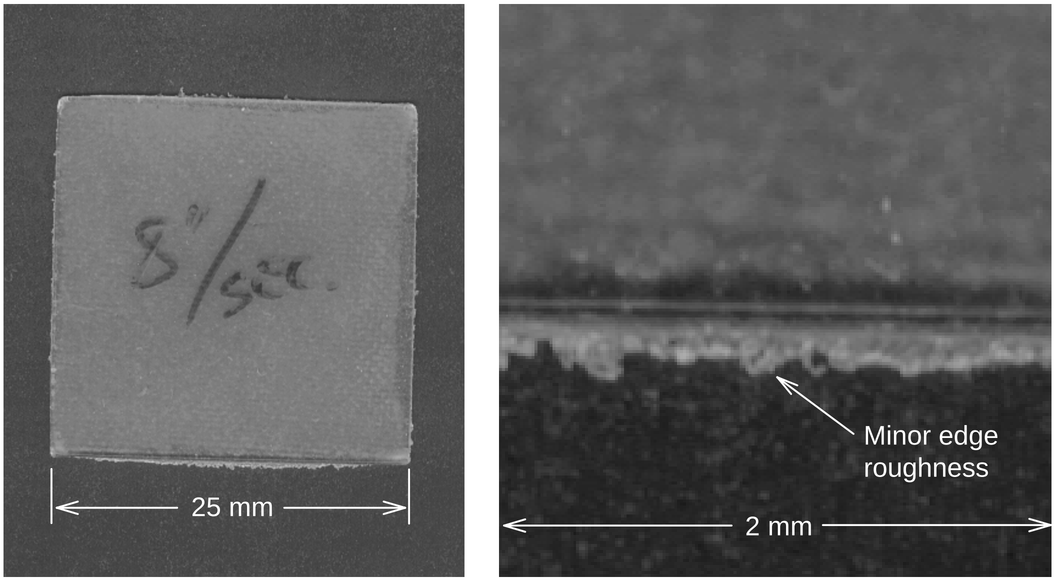

Figure 12 **Top views of an EVA sheet, laser cut at 20 cm/s. The photo on the right is a close up of the bottom edge of the sheet in the left photo.**

Figure 13 shows two laminated modules trimmed by the same laser at a slow rate of 2.5 cm/s. The left photo in Figure 13 shows areas in the Tedlar back sheet that burned during a close trim. The edge shown in the right photo in Figure 13 has acceptable appearance (no burning) but the amount of EVA beyond the glass edge is too large. Bubbles formed in the EVA at the module edges in both samples shown in Figure 13, although they are difficult to see in the photographs.

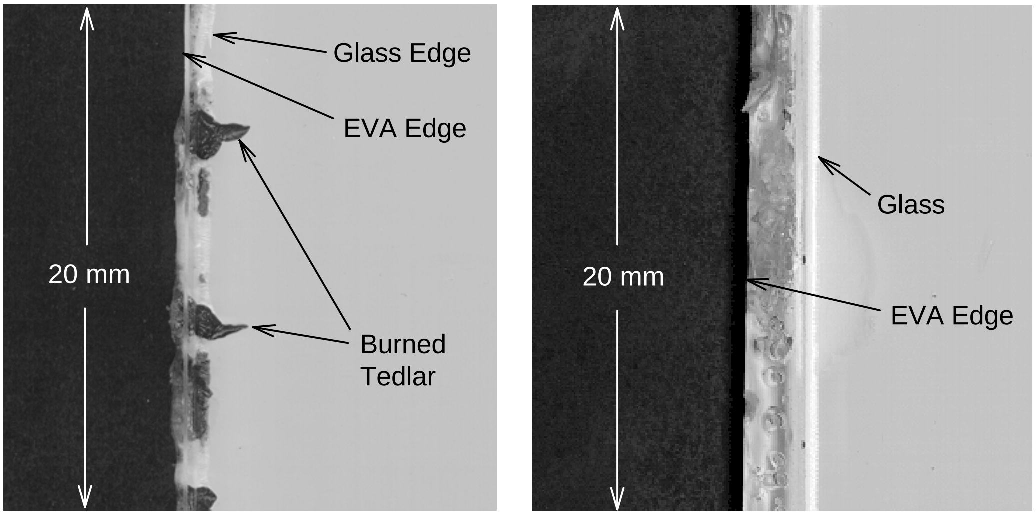

Figure 13 **Top views of laminated modules with laser trimmed edges. The module shown at left has burned areas in the Tedlar back sheet. The module at right has no burn marks but was trimmed too far from the glass edge.**

The laser cutting shop reported achieving good edge quality when the trim rates were below 2.5 cm/s, but a rate of 13 cm/s is needed to achieve the throughput goal. The laser shop suggested increasing the number of cutting beams to increase the throughput, but this would result in a significant cost increase for the laser system. Even with a single laser beam, cost is an issue. Compared to a hot knife, the laser cutting system is approximately 100 times the cost. The increased cost would be partially offset by the need to replace consumable components (blades) in the hot knife system, but it is unlikely that the cost offset would be sufficient to justify the initial expense of the laser system.

A further disadvantage of the laser system is the potential for module damage. An edge sensing error that results in positioning the laser beam inside the glass edge will damage the module, since the laser must deliver sufficient power to burn through the encapsulant and the back cover material. These three key barriers, low process throughput, high system cost, and potential for module damage, caused the laser approach to be abandoned.

2.3.1.3 Hot Wire Trimming

A prototype hot wire trimming system was designed and assembled at ARRI, as shown in Figure 14. The robotic arm, optical edge sensor, and module vacuum stage used for the spinning saw trials were used in these tests.

At the start of a cutting pass, the cutting action of the wire is very good. However, as the wire proceeds along the module edge, the material in a region local to the cut zone cools the wire. The remaining wire tends to overheat and the cutting action degrades significantly. As the cutting action degrades, the wire begins to yield and eventually breaks. At much lower speeds the cutting action of the hot wire is very effective. Unfortunately, the effective cut rate is less than 20% of the required rate.

Larger wires would likely be able to sustain greater resistance to the yield problem. However, as the wire diameter increases, so does the force required to move the wire through the material. Thus, the hot wire technology does not meet the production throughput requirements.

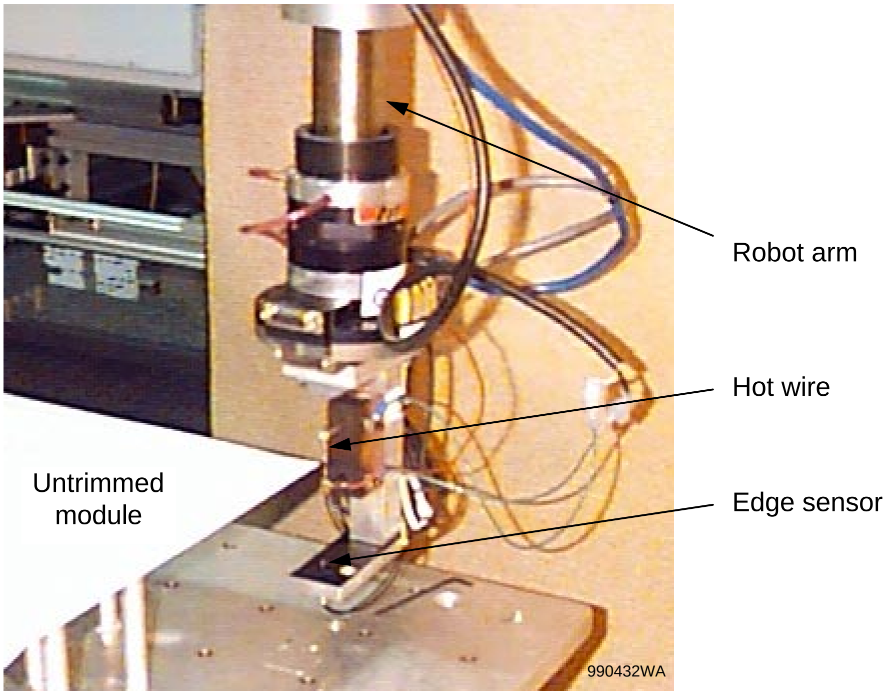
Robot arm
Hot wire
Untrimmed module
Edge sensor
990432WA

Figure 14 Hot wire prototype setup for module trimming.

2.3.1.4 Hot Knife Trimming

A prototype hot knife trimming system was designed and assembled at ARRI, as shown in Figure 15. The robotic arm, optical edge sensor, and module vacuum stage used for the spinning saw and hot wire trials were used in these tests.

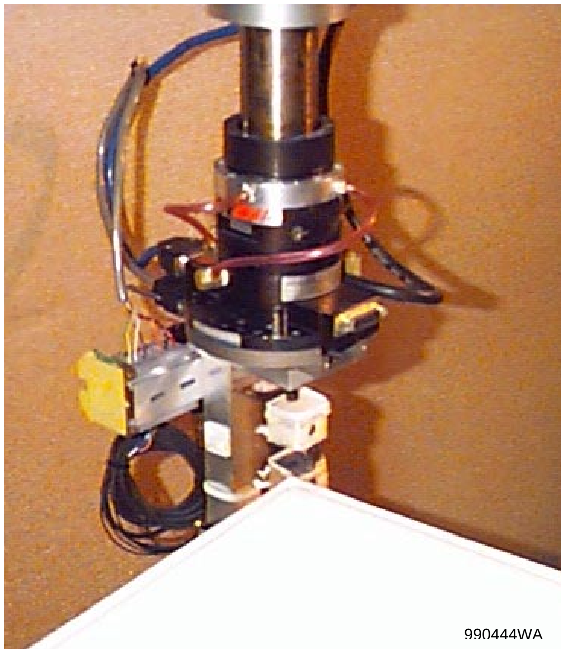

Figure 15 Hot knife prototype setup with graphite blade and untrimmed module.

The first hot knife trials were done with a graphite blade fabricated by ARRI. Edge trimming was more successful than with the hot wire due to the higher thermal capacity of the graphite blade. A good quality edge finish was achieved at a blade temperature of 340°C and a cutting speed of 6.4 cm/s. An acceptable edge finish could not be achieved at the desired throughput of 13 cm/s, however, even when the blade temperature was increased to 400°C.

Next a commercial hot knife was obtained that uses a variety of metal blades. Trials were done with various blade types, blade temperatures, and cutting speeds. A nominal offset of 1 mm was used between the glass edge and the cutting path to prevent excessive blade wear.

Four different blade shapes were tested. One shape proved to be the most durable and also produced the best quality cuts. Cutting speeds from 13 cm/s to 23 cm/s produced good edge finishes. These speeds meet the production rate goal. In tests done at higher cutting speeds, the hot knife power supply could not maintain the blade temperature and the cut finish deteriorated.

A thermocouple was used to measure the blade temperature. The maximum blade temperature was limited to 425°C, as specified by the knife manufacturer. At temperatures above 450°C, the blade starts to glow red and will deform easily. A temperature setting between 400°C and 425°C was sufficient to produce a good quality cut edge for cutting speeds between 3.6 cm/s and 23 cm/s.

Trimmed material (EVA and Tedlar) did not accumulate on the hot knife blade. The hot knife was able to cut through Tedlar when there was no EVA beyond the glass edge to support it, which the spinning saw could not do. Given the low cost of the hot knife system and the ability to achieve good quality trimmed edges at speeds that meet the production throughput requirements, the hot knife was selected as the best approach for the edge trimming process.

2.3.2 Edge Trimming Production Prototype Concept

A concept was developed for a prototype automated production edge trimming system. The system, shown in Figure 16, consists of four main components: a conveyor system, a module lift, a four axis Cartesian robot, and an end effector for edge sensing and trimming.

The conveyor system has three sections: input, trimming station, and output. Motor driven rollers and belts transport modules through the system. Two belts are used at the trimming station to provide clearance for the module lift and to allow material to be collected automatically when it is trimmed from the module edges. A module aligner consisting of stops and a snugger provides coarse alignment for untrimmed modules at the trimming station. The module lift consists of a set of mechanical supports, vacuum cups, and a pneumatic actuator for securely holding the module and raising it above the conveyor.

The robot end effector includes two photoelectric sensors and their controls, a hot knife and blade, and mounting fixtures for attaching these components to the robot. Two important enhancements were made compared to the end effector used for process development. First, an additional sensor was added to reduce the sensing time. With two sensors, the end effector can detect two edge points on adjacent sides of a module in one scan, by scanning each corner at a 45° angle with respect to the module sides. This reduces the number of edge scans from eight to four, while still detecting eight edge points.

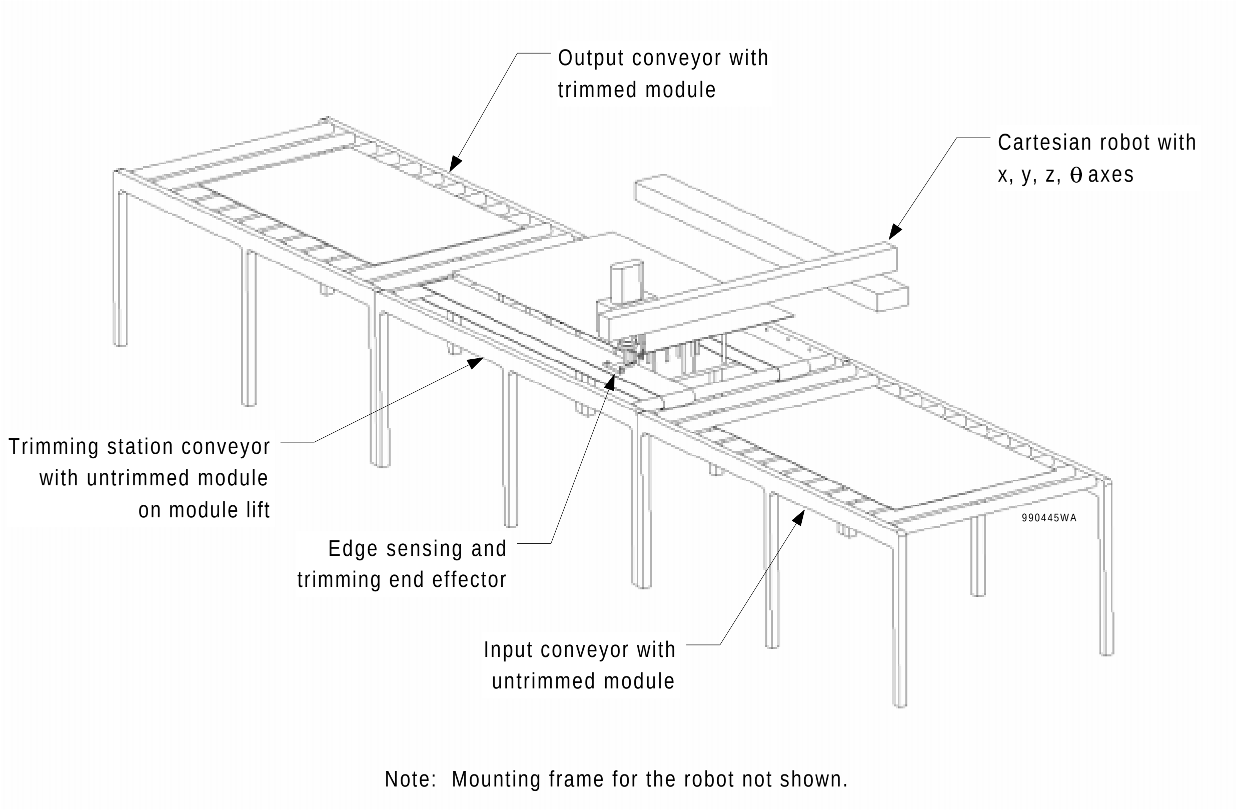
Output conveyor with trimmed module
Cartesian robot with x, y, z, θ axes
Trimming station conveyor with untrimmed module on module lift
Edge sensing and trimming end effector
Input conveyor with untrimmed module
990445WA

Note: Mounting frame for the robot not shown.

Figure 16 Production edge trimming system concept.

For the second enhancement, the two sensors are mounted on the opposite side of the robot's rotational (θ) axis from the hot knife. This design change was done to prevent trimmed material from falling on top of the sensors.

A four axis (x, y, z, θ) robot moves the sensing and trimming end effector around the module. Based on the layout of the concept design for the trimming station, the robot needs a work volume of 122 cm wide x 173 cm long x 5 cm high to accommodate a maximum module size of 102 cm x 162 cm. The maximum speed of the robot must be at least 50 cm/s to achieve the desired cycle time.

The edge trimming process is listed in Table 7, along with cycle times for each step, as estimated by ARRI. The cycle times assume a conveyor speed of 13 cm/s, a scan rate of 6.4 cm/s for optical sensing at the four module corners, a sensor travel speed between corners of 51 cm/s, and a trimming rate of 13.7 cm/s. The total cycle time for a 91 cm x 46 cm module is estimated to be 44.5 s.

Several key design considerations for the production system follow, based on the work done to develop the edge trimming process and the concept design.

- The greater the uncertainty in the position of the untrimmed module after coarse alignment, the longer the sensing time. This is true because the distance the sensors on the end effector must travel to find the edge points increases with the uncertainty in the location of the edges.

Table 7 Edge trimming process and estimated cycle time for a 91 cm x 46 cm module.

	Process Step	Cycle Time (s)
1	Advance untrimmed module into work cell Advance trimmed module out of work cell Activate stop after trimmed module passes it	8.0
2	Activate snugger to align module Retract snugger	1.0
3	Activate vacuum cups on module lift Activate module lift	1.5
4	Run edge sensing	13.0
5	Run trimming	20.0
6	Retract module lift	1.0
	Total	**44.5**

- Most of the edge sensing time is used to move the sensors on the end effector to the four corners of the module. Placing the sensors on the end effector provides greater flexibility (for example, sensor position adjustments for different module sizes can be done in software) and a simpler design (only one pair of sensors). However, the cycle time can be reduced (by approximately 10 s for the case shown in Table 7), if necessary, by mounting eight sensors (two per module corner) on independent actuators around the module.
- The module lift assembly and the module aligner assembly must be designed to accommodate a range of different module sizes. For example, the number and/or locations of the vacuum cups and module supports in the lift assembly may need to be adjusted. Any mechanical adjustments must be designed for rapid turnaround.

2.3.3 Edge Sealing and Framing Process Development

Automated processes were developed and demonstrated for sealing and framing the edges of trimmed modules. The sealant acts as an adhesive between the frame and the module edges and as a gasket to cushion the glass in the aluminum frame. A diagram showing the module, sealant, and frame is provided in Figure 10.

2.3.3.1 Sealing Process Research

Module frames typically consist of four extruded aluminum sections which are fastened together at the corners, either with sheet metal screws or corner keys. Corner keys reduce the amount of frame machining required, since a simple miter joint of identical frame sections is all that is needed. Frames assembled with screws require machining to remove the laminate channel at each corner, and drilling for clearance holes for the screws. Corner keys also provide a degree of self-alignment for the frame sections, which simplifies automation somewhat. Thus corner keys were selected for prototype process development.

Module edge sealing techniques that were evaluated include applying a foam adhesive tape to the laminate edges and dispensing a bead of sealant into a channel in the frame. Three classes of sealants were considered: RTV silicone, foam tape, and hot-melt butyl rubber. A comparison of several of the sealant materials considered in this program is provided in Table 8. The butyl rubber sealants are the least expensive, with an average cost of $0.22 per module, while the foam tapes are the most expensive, at $2.50 per module.

Table 8 Representative sealant materials considered for edge sealing.

Sealant	Features	Cure Time	Cost/Module
Dow Corning 733 Silicone RTV	One-part sealant; adheres to glass, metal, plastic, etc.	24 hours	$0.33
3M 4962 Foam tape, double sided adhesive	Closed cell neoprene foam, acrylic adhesive; adheres to aluminum, steel, plastic	None (pressure sensitive adhesive)	$2.50
H. B. Fuller HL Series Thermo-Seal Hot melt butyl	100% solids; designed for insulated glass industry; adheres to glass and aluminum	3 minutes	$0.15
Q'SO Inc. Q-17 Hot melt butyl	100% solids; designed for window industry; adheres to glass, vinyl, and aluminum	30 seconds	$0.28

The method of applying the sealant was also considered in selecting a module edge sealant material. Both butyl rubber and RTV can be applied with off-the-shelf dispensing equipment. No standard equipment is available for automatically dispensing tape sealant around laminate edges, so a custom designed system is required. Given the high cost of the tape and the need to develop dispensing equipment, the tape option was discarded.

Although the RTV can be dispensed in a similar manner as the butyl rubber, the cure time of the RTV is too long, at up to 24 hours. Handling uncured modules could have an impact on the quality of the final product. Since the hot-melt butyl sealants have much faster curing times and lower cost than the RTVs, they were selected as the best material for this application.

ARRI selected the Q'SO material for process development and testing. Although the price is higher than other hot-melt butyls, a local representative from Q'SO was available to support prototyping efforts. Support was provided in setting up the dispensing process and obtaining sealant material and hot-melt dispensing equipment.

A hot-melt pump was obtained and used to develop a process for dispensing the butyl rubber into the channel that holds the laminate in the module frame. Frame sections were picked up by a vacuum end effector on a robot arm and moved at a constant speed past the hot-melt dispensing nozzle. Uniform and consistent sealant beads were dispensed into the frame channels. The optimum dispensing rate is between 13 and 18 cm/s. A 16 cm/s dispensing rate was used for prototype process demonstrations.

The hot-melt pump has temperature control for its supply tank, its heated hose, and its dispense head. All three components were set to 188°C. The pump motor operates at a constant speed and a screw valve permits the control of flow by varying the bypass of the sealant. A needle valve at the dispense head controls the on/off of the sealant dispensing. The pump was turned on only while dispensing to prevent building up excessive back pressure.

Tests showed that it was necessary to dispense a small amount of butyl sealant prior to dispensing into the frame channel, to obtain a uniform bead in the channel. This sealant can be collected and recycled, since it is 100 % solids. In the next phase, we will investigate heating the nozzle to see if we can eliminate this extra dispensing step.

Pull test samples were prepared to determine the adhesive strength of the Q-17 butyl sealant. Tests were done with aluminum to glass and aluminum to Tedlar test samples.

The setup for aluminum to glass adhesion testing is shown in Figure 17. A 13 mm thick glass plate and a 13 mm thick aluminum plate were bonded together with the butyl material. Spacers, 1.5 mm thick, were used to maintain a consistent gap between the glass and aluminum plates. Weights were added to a hook attached to the aluminum plate.

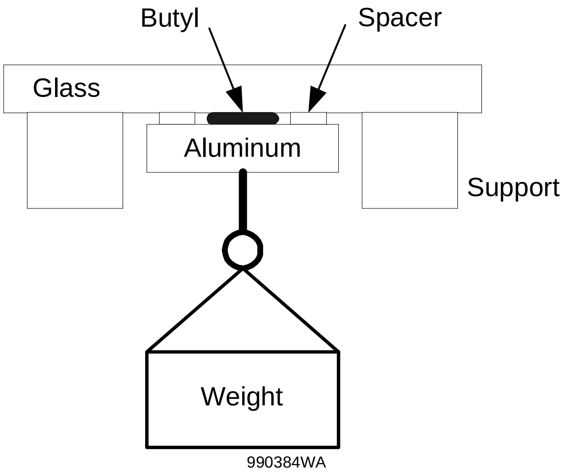

Figure 17 Sealant adhesion test setup, aluminum to glass.

The diameter of the sealant contact surface area was measured through the glass plate. The load carrying capacity of the sealant was determined by adding weight until the contact surface deformed. The weight was measured and used to calculate the sealant yield stress using the formula stress = load/area. Additional weight was added until the parts separated to determine the ultimate stress. The test results are provided in Table 9.

Table 9 Butyl sealant strength test data, aluminum to glass.

Sealant Diameter (minimum) (inch)	Load Yield (lbs)	Ultimate (lbs)	Yield Stress (psi)	Ultimate Stress (psi)
1.20	13.82	15.46	12.22	13.67
1.13	12.33	13.38	12.29	13.34
1.28	15.73	17.87	12.22	13.89
Average	13.96	15.57	12.25	13.63
Standard Deviation	1.70	2.25	0.04	0.27

The setup for aluminum to Tedlar adhesion testing is shown in Figure 18. A Spire test module and a 13 mm aluminum plate were bonded together with the butyl sealant. As in the previous test, 1.5 mm thick spacers were used to maintain a consistent gap between the Tedlar and the aluminum plate, and weights were added to a hook attached to the aluminum plate. Test results are provided in Table 10.

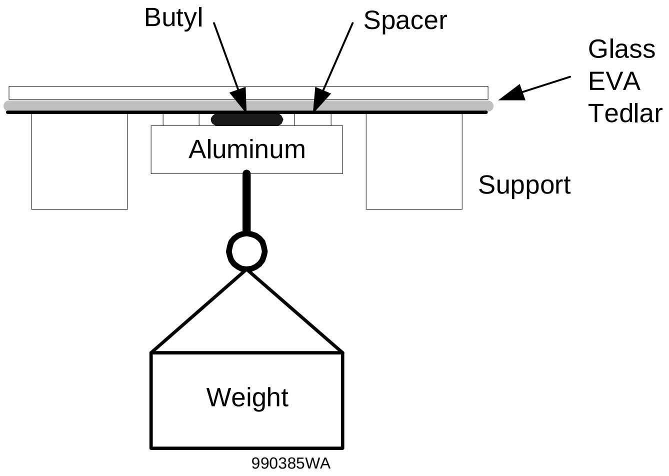

Figure 18   Sealant adhesion test setup, aluminum to Tedlar.

Table 10   Butyl sealant strength test data, aluminum to Tedlar.

Sealant Diameter (minimum) (inch)	Load Yield (lbs)	Load Ultimate (lbs)	Yield Stress (psi)	Ultimate Stress (psi)
1.25	18.06	20.26	14.72	16.51
1.20	18.06	20.26	15.97	17.91
1.35	20.26	22.68	14.15	15.84
Average	18.79	21.07	14.95	16.76
Standard Deviation	1.27	1.40	0.93	1.06

2.3.3.2 Edge Sealing and Framing Process Demonstration

Edge sealing and framing prototype processes were successfully demonstrated at ARRI using the same work cell used for the edge trimming process demonstration. Modules trimmed automatically by the prototype edge trimming process were used for the sealing and framing tests. Spire provided ARRI with corner keys and long extruded aluminum frames. Frame sections were fabricated by cutting the extrusions to the required length using miter cuts. Two 3/8” diameter holes were drilled in the bottom flange of each frame section to facilitate locating and holding the sections in fixtures. Similar holes are commonly used for mounting modules, so these holes do not require extra machining.

Four subassemblies were designed and built to develop and demonstrate the sealing and framing processes: a corner key inserter, an out-rigger end effector, a dispensing system, and a framer.

Corner key inserter - This prototype assembly, shown in Figure 19, inserts corner keys into both ends of two of the four frame sections. The frames are held fixed with pins through their mounting holes, while the keys are mounted on sliding carriages at opposite ends of two of the frame sections. The carriages are driven by two large opposing air cylinders that press the keys to the desired depth into mating channels in the frames.

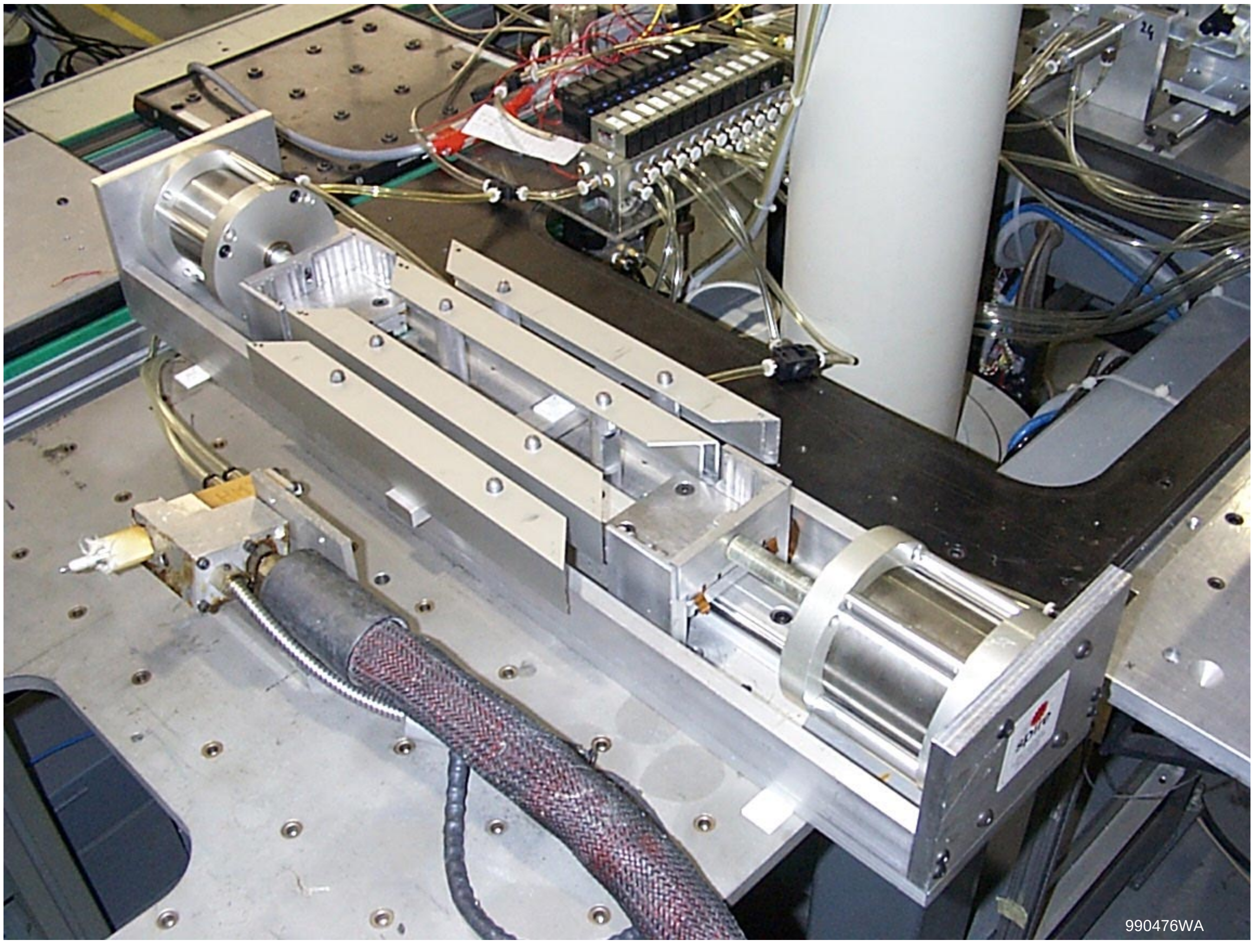

Figure 19 Prototype corner key inserter (center) and sealant dispense head (left).

Out-rigger end effector **-** A robot end effector was designed with vacuum cups for picking up frame sections and laminates. A stabilizing bar was added after initial trials for more reliable handling of laminates.

Dispensing system **-** The dispensing system consists of a hot-melt pumping system and a fixture to hold the dispensing nozzle. The nozzle tip was set at an upward angle for three reasons: 1) to compensate for gravity, since dispensing was done close to the horizontal, 2) to direct more sealant toward the deeper top side of the channel, and 3) to avoid interference with the frame section and corner keys as they pass by the tip.

Framer **-** The framer installs four frame sections around the trimmed module laminate. The prototype framer is shown in Figure 20.

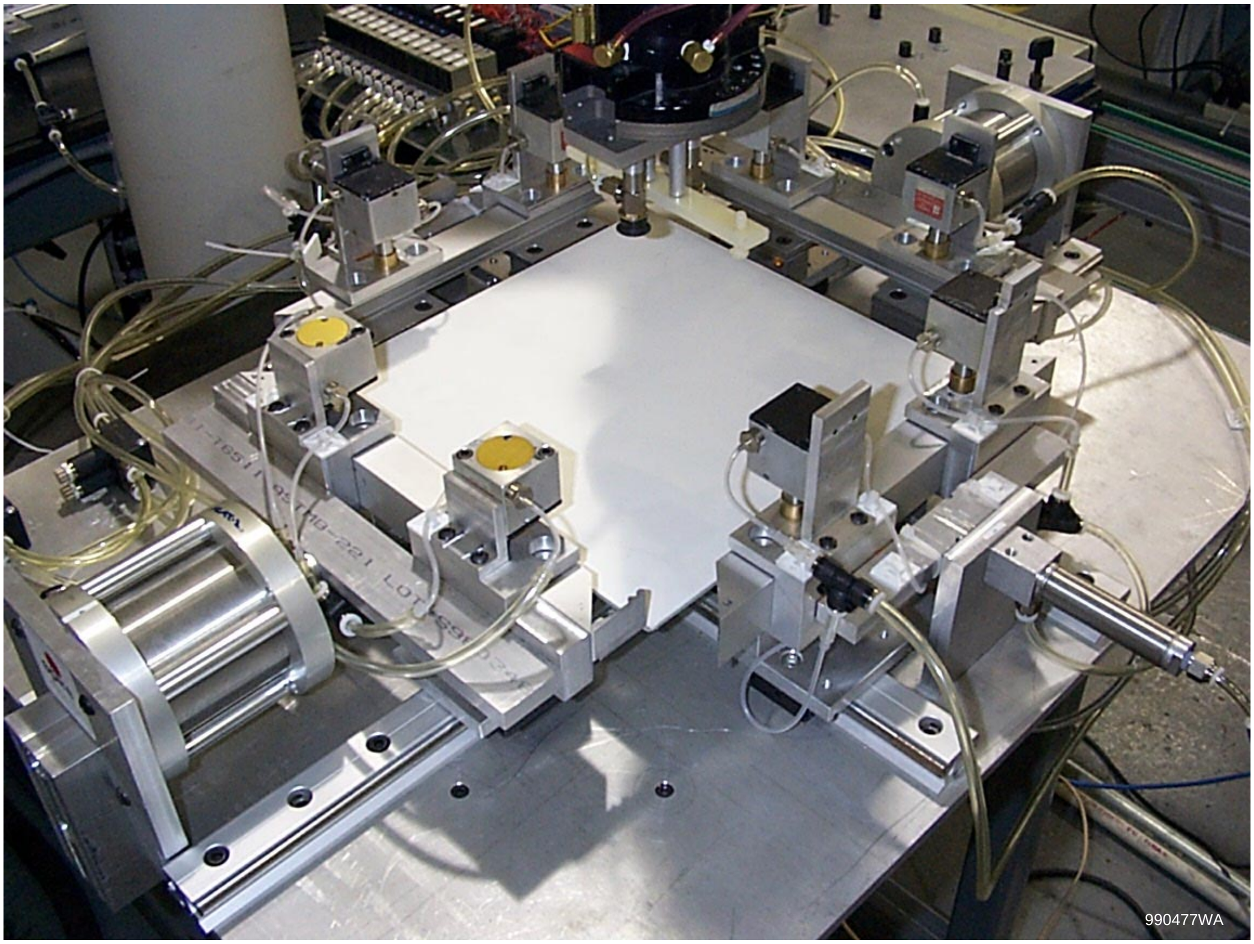

Figure 20 **Prototype framer with laminate and frame sections loaded and ready for installation. Out-rigger end effector is shown at top center.**

The prototype framing process is as follows:

1. The robot with the vacuum end effector picks up a trimmed module and places it on the framer's module stand. The stand allows the module to slide freely on supporting blocks.

2. The robot picks up each frame section and moves the frame at a constant speed past the sealant dispensing tip, which fills the frame channel with sealant. The frame section is then placed in its appropriate position in the framer.

3. Pins extend through the frame mounting holes to hold the each frame section securely in place.

4. After the sealant-filled frame sections are locked in place, air cylinders press the frame sections together. First the two frame sections without corner keys are pressed onto the sides of the module, causing the sealant in the frame channels to flow around two of the module edges. Then the two frame sections with keys are pressed to lock the frames together and seal the other two module edges.

2.3.4 Edge Sealing and Framing Production Prototype Concept

A concept was developed for a prototype automated production edge sealing and framing system. The system, shown in Figure 21, consists of five main components: a conveyor system with module lift, a framer, a long frame subsystem, a short frame subsystem, and a Cartesian robot with a vacuum gripper. The edge sealing and framing concept described in this section is designed to accommodate modules up to 102 cm x 162 cm, although systems can be produced for larger modules using the same design principles.

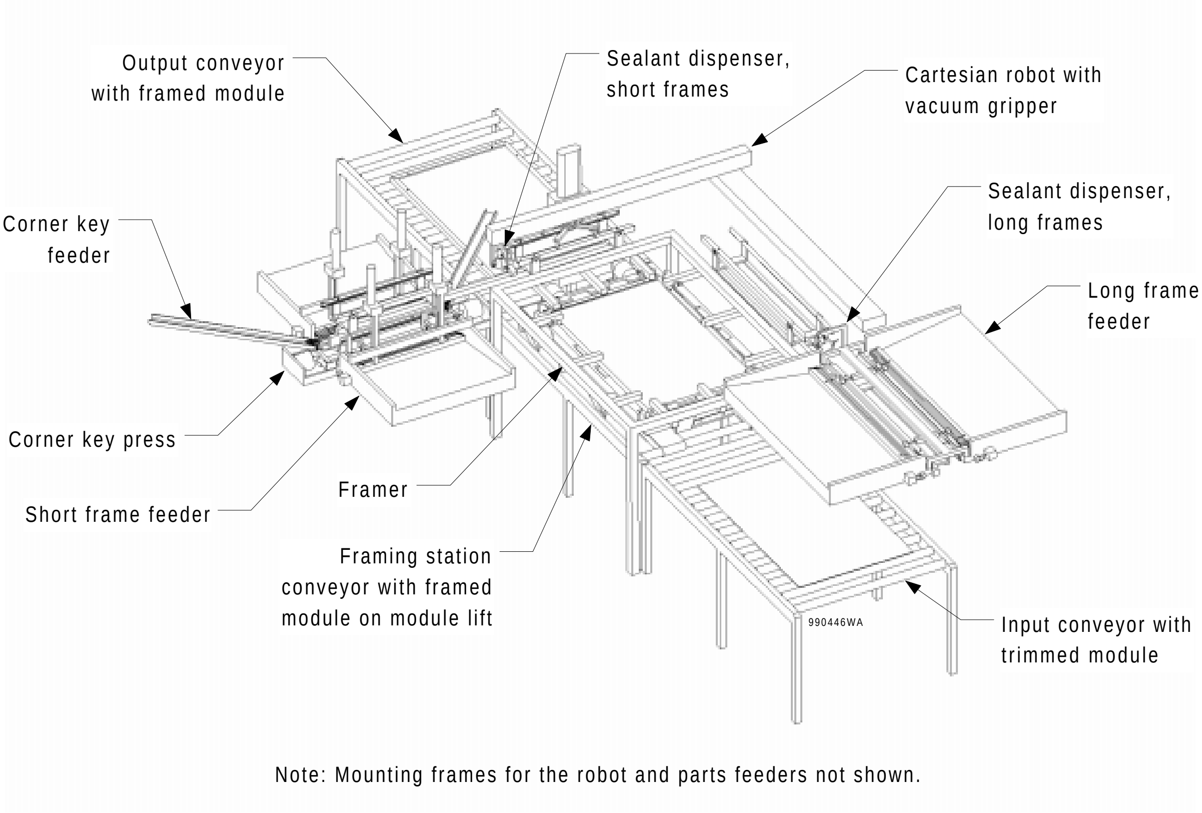
Output conveyor with framed module
Sealant dispenser, short frames
Cartesian robot with vacuum gripper
Sealant dispenser, long frames
Corner key feeder
Long frame feeder
Corner key press
Framer
Short frame feeder
Framing station conveyor with framed module on module lift
990446WA
Input conveyor with trimmed module

Note: Mounting frames for the robot and parts feeders not shown.

Figure 21 Production edge sealing and framing system concept.

2.3.4.1 Conveyor System and Lift

The conveyor system is similar to the one described for the edge trimming concept in Section 2.3.2. It consists of motor driven roller conveyors for input and output and a dual belt conveyor with a module lift at the framing station. A module aligner consisting of stops and a snugger provides alignment for trimmed modules at the framing station. The module lift is similar to the lift described for the edge trimming system, except in this case the lift does not require vacuum cups, since the module is allowed to slide on its support blocks during the framing process.

2.3.4.2 Framer

The framer is similar in design and operation to the prototype framer described in the previous section. In this concept, however, the trimmed module is not transported by the robot but it is raised into the framer by the module lift. Either pneumatic or hydraulic cylinders will be used to press the frame sections onto the trimmed module.

2.3.4.3 Long Frame Subsystem

The long frame subsystem handles the pairs of frame sections without corner keys. These sections are typically the longer of the two sizes of frame sections for rectangular modules. This subsystem consists of three components: frame feeders, a frame loader, and a dispensing system.

Two frame feeders are mounted opposite each other on either side of one end of the dispensing system. They are located outside the work volume of the Cartesian robot and are designed to be reloaded while the station is operating. Each feeder has a capacity for 60 frame sections, equivalent to one hour of operation at a production rate of one module per minute. The frame feeders operate as follows:

1. An operator retracts a push bar, loads frame sections in the proper orientation, and engages the push bar. The push bar presses against the back of the last frame section in the feeder to move the frames towards the front of the feeder as it is emptied.

2. A pair of vacuum cups mounted on actuators in the front of the feeder extract the first frame section from the frame stack. The top of the first frame section is then exposed and ready for pick up by the frame loader.

3. Two mechanisms mounted on opposite sides of the feeder hold and advance the frame section located directly behind the first frame section in the stack. These mechanisms work in concert with the feeder vacuum cups to dispense frames one at a time. Each mechanism has a two-actuator linkage, one to hold the frame and one to index it forward by the distance of one frame in the stack.

The frame loader moves two frame sections, one from each of the two opposing frame feeders, to the frame holder on the dispensing system. A pair of vacuum cups acquires each frame section from the feeder, and a two-axis (horizontal and vertical) pneumatic pick-and-place mechanism transports the frame from the feeder to the holder on the dispensing system.

The dispensing system consists of a two-head hot-melt sealant dispenser and a frame transport subsystem. Based on a production rate of one module per minute, the system will need to hold at least 12 liters of sealant for an eight hour shift. The two dispensing heads are mounted next to each other with tips pointing in opposite directions. The tips are also pointed up at an angle of approximately 30° above the horizontal. The frame transport subsystem moves two frame sections past the two dispensing heads at the desired velocity. Each dispenser tip is positioned to dispense sealant into the channel of its corresponding frame section as it passes by.

The frame transport subsystem consists of a frame holder carriage assembly mounted on a long slide rail. The frame holder has vacuum cups and supporting surfaces to hold the frame sections securely in the proper location with respect to the sealant dispenser tips. The slide rail has a variable speed drive system, such as a belt drive or a linear motor, with a travel of approximately 182 cm to accommodate a maximum frame length of 162 cm. The frame holder carriage will be capable of speeds up to 38 cm/s. After sealant dispensing, the slide rail will position the frame sections at a location that is aligned for placement in the framer.

2.3.4.4 Short Frame Subsystem

The short frame subsystem handles the pairs of frame sections with corner keys. These sections are typically the shorter of the two sizes of frame sections for rectangular modules. This subsystem consists of six components: frame feeders, frame loader, corner key feeders, corner key loader, corner key inserter, and dispensing system.

The frame feeders use the same design as the feeders in the long frame subsystem, except the maximum frame section length is shorter. The two feeders are mounted on opposite sides of the corner key inserter.

The frame loader is a pick-and-place mechanism with vacuum cups that transports frame sections from the frame feeders to locating posts on the corner key inserter. After the keys are inserted in the frame sections, the loader transports the frame sections from the key inserter to the frame holder on the dispensing system. By arranging the geometry of the frame locations on the feeder, key inserter, and frame holder as a right triangle, only three pneumatic actuators (horizontal, short vertical, and long vertical) are needed to provide the required motions.

Two corner key feeders are mounted at opposite sides of the key inserter. They are located outside the work volume of the Cartesian robot and are designed to be loaded while the station is operating. Each feeder supplies two corner keys per module, and has a capacity for 120 keys, equivalent to one hour of operation at a production rate of one module per minute.

An operator retracts a push bar, loads corner keys in the proper orientation, and engages the push bar. The push bar presses against the back of the last corner key in the feeder to move the keys towards the front of the feeder as it is emptied. A pair of pins in the front of the feeder actuate to control the release of one key at a time.

Two corner key loaders, one at each key feeder, move one corner key at a time from the feeder to two alternating locations on the corner key inserter. Each key loader has two vacuum cups to grip the key and three motion axes: horizontal (approach and retract), vertical (move from feeder to inserter), and rotation (place at alternate locations on the inserter).

The corner key inserter is similar in design and operation to the prototype shown in Figure 19, with two differences. First, suction cups have been added to the corner key carriages to hold the keys securely when they are placed by the corner key loader. Second, the overall length was increased to make room for corner key loading.

The dispensing system is similar to the one used in the long frame subsystem except for its length. The rail that carries the frame sections past the dispenser tips will have approximately 122 cm of travel to accommodate a maximum frame section length of 102 cm.

2.3.4.5 Robot and Gripper

A Cartesian robot with a vacuum gripper end effector transfers frame sections from the long and short frame subsystems to the framer. The gripper picks up two frame sections at one time and places them one at a time in the appropriate holder in the framer. The robot work volume must be approximately 137 cm x 198 cm x 18 cm to handle a maximum module size of 102 cm x 162 cm. The maximum speed must be approximately 51 cm/s to achieve the desired throughput.

The edge sealing and framing process is listed in Table 11, along with cycle times for each step, as estimated by ARRI. The cycle times assume a conveyor speed of 13 cm/s and a sealant dispensing rate of 16 cm/s. The total cycle time for a 46 cm x 91 cm module is estimated to be 23.5 s.

Table 11 Edge sealing and framing processes and estimated cycle times.

Short Frame Subsystem	Long Frame Subsystem	Cartesian Robot	Conveyor & Framer
• Wait for robot to unload 2 short frames (2.0 s) • Pick 2 frames from feeders, place in press; pick 4 keys from feeders, place in press (9.5 s) • Actuate & retract key press (3.0 s) • Return empty frame holder (2.0 s) • Pick frames from press, place in holder (3.5 s) • Run frames past sealant dispenser (3.5 s)	• Wait until robot ready to unload long frames (2.5 s) • Run frames past sealant dispenser (6.5 s) • Wait for robot to unload 2 long frames (2.0 s) • Return empty frame holder (2.0 s) • Pick 2 frames from feeders (5.0 s) • Place 2 frames in holder (1.0 s) • Wait for robot and framer to finish (4.5 s)	• Pick 2 short frames after sealant dispense (2.0 s) • Place 2 short frames in framer (7.0 s) • Pick 2 long frames after sealant dispense (2.0 s) • Place 2 long frames in framer (5.5 s) • Wait for framer to finish framing (7.0 s)	• Convey framed module out & trimmed module in, extend stop (8.0 s) • Align module, retract aligner (2.0 s) • Wait for robot to load 4 frame sections (6.5 s) • Extend module lift (1.0 s) • Press long frames onto module (2.0 s) • Press short frames onto module (2.0 s) • Retract frame press & lift (2.0 s)
Total = 23.5 s	Total = 23.5 s	Total = 23.5 s	Total = 23.5 s

Several key design considerations for the production system follow, based on the work done to develop the edge sealing and framing processes and the concept design.

- The fast cure rate of the hot-melt butyl sealant is a positive attribute for production, but the process must be designed so that the frame sections are pressed onto the module shortly after dispensing (within ~20 s) to obtain good flow of the sealant around the module edge.

- Extra insulation was added around the sealant dispensing head and tip to maintain consistent flow rates. A short purge cycle just prior to dispensing was also helpful for obtaining consistent flow rates. The sealant dispensed during the purge cycle can be collected and recycled.

- Large forces are needed to insert the corner keys into the frame sections at the key press and at the framer. Rigid supports and rails are required to maintain frame and key alignment under these forces.

- Compared to frame assembly done by an operator, it is difficult to design an automated system that can compensate for significant dimensional variation among the frame sections. Therefore, the frame sections must be cut to length within the dimensional tolerances required by the automated system.

2.4 Task 4 - Develop Integrated Test System

An integrated test system for PV modules was developed under Task 4. The system combines a sun simulator for measuring module performance, an electrical isolation (hi-pot) tester, and a ground continuity tester. Automation was developed for transporting, aligning, probing, and testing modules.

2.4.1 Design Approach

Spire initially planned to develop a system that combines a hi-pot test with a module performance test (I-V curve measurement under simulated sunlight). However, the PV manufacturer survey done under Task 1 identified the need to perform a ground continuity test in addition to the hi-pot and performance tests, to meet UL requirements.[5] Thus the ground continuity test was added to the hi-pot test station. Test electronics, probes, and controls were added for this test. Additional probes are needed because the continuity of each exposed conductive element (typically the four frame sections) must be tested individually. Automatic switching was added to allow the probe connections to the test electronics to be configured as needed for hi-pot and ground continuity testing.

The PV industry survey also showed that some manufacturers do hi-pot, ground continuity, and module performance tests in sequence after the module is framed, while others measure module performance before framing, and do the hi-pot and ground continuity tests after framing. As a result, our overall design strategy was changed from a single test system to a two-part system that can be configured to work with either process sequence. Two test stations were developed that can be used separately or in combination, where one station performs hi-pot and ground continuity tests and the other measures module performance.

The testing process sequence was revised to incorporate this two-step approach. In addition to improved process flexibility, the new sequence provides higher product throughput, since testing is done simultaneously at two test stations, rather than in sequence at one station.

2.4.2 Sun Simulator Development

Spire produces a series of commercial sun simulators for module testing that have a light source mounted at the top of a tower, shining down on a horizontal test plane. Spire also produces an inverted style in which the light source is located near the floor, shining up to a horizontal test plane. While both the standard and the inverted simulators can be automated, the inverted design was selected for this application because modules are typically processed face-down after lamination. Thus the modules do not need to be turned over for testing.

A new size sun simulator, designated the SPI-SUN SIMULATOR™ 350i, was designed with a test area of 102 cm x 162 cm. This simulator, shown in Figure 22, is large enough for testing most production modules without consuming excessive production floor space. The design is a modification of Spire’s larger inverted sun simulator, the SPI-SUN SIMULATOR 460i.

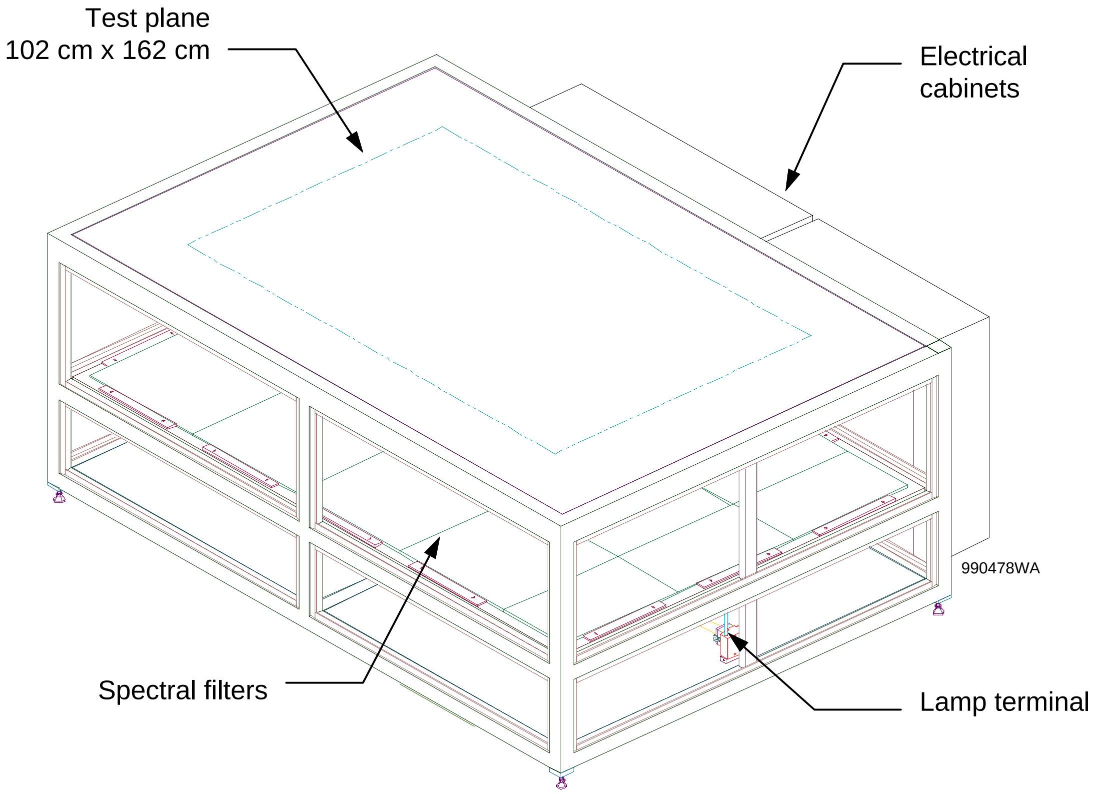

Figure 22 SPI-SUN SIMULATOR 350i design. Side panels removed to show detail.

The 350i simulator was designed with one xenon flash lamp, in place of the two that are used in the larger 460i, to simplify the optics and the lamp power and trigger electronics. A new pulsed xenon lamp was designed for the 350i simulator with a 195 cm arc length, 28 cm longer than the longest lamp previously used by Spire. Two of the new long xenon lamps were fabricated and tested. The lamps were made with different Xe fill pressures to evaluate this parameter on lamp performance. As pressure increases, lamps produce more light at a given voltage, but at some point the pressure becomes so high it prevents the lamp from flashing. Each lamp was connected to a simulator power supply and both flashed successfully over a range of voltages. The lamp with the higher fill pressure was selected for use in the simulator. The fill pressure is below atmosphere, so there is no explosion hazard if a lamp should break.

Mechanical assembly drawings, detail drawings, and bills of material were created and reviewed, and parts were released for fabrication and procurement. After the 350i simulator was fabricated, light spatial uniformity and repeatability tests were done to characterize its performance. The test plane irradiance was measured at 40 locations (in a 5 x 8 matrix) with a 103 mm square single crystal silicon solar cell. The uniformity of total irradiance, in percent, was calculated according to the method defined in ASTM E 927:[10]

$$\text{Uniformity} = \pm 100 \times \left(\frac{\text{Irradiance}_{\text{Max}} - \text{Irradiance}_{\text{Min}}}{\text{Irradiance}_{\text{Max}} + \text{Irradiance}_{\text{Min}}} \right) \qquad \mathbf{1}$$

Uniformity was measured under three conditions: 1) under ambient fluorescent room lighting, 2) with the room lights turned off, and 3) with a large sheet of heavy black paper placed over the test plane. The results, listed in Table 12, show that room lighting does not have a significant effect on the uniformity of irradiance at the test plane. The data also shows that the simulator easily meets its design specification of ±3% under all three test conditions.

Table 12 Uniformity and repeatability measurements, SPI-SUN SIMULATOR 350i.

Test Conditions	Results
Uniformity	
• Room lights on	±2.12%
• Room lights off	±2.11%
• Black background	±2.30%
Repeatability	
• Center	±0.05%
• Top left	±0.09%
• Bottom left	±0.09%
• Top right	±0.11%
• Bottom right	±0.10%

Simulator repeatability data was obtained by placing the 103 mm square single crystal silicon solar cell in a fixed location on the test plane and making 40 measurements. This test was done at five locations on the test plane, at the center and at locations near the four corners. Repeatability, in percent, was calculated by the same method as uniformity:

$$\text{Repeatability} = \pm 100 \times \left(\frac{\text{Irradiance}_{\text{Max}} - \text{Irradiance}_{\text{Min}}}{\text{Irradiance}_{\text{Max}} + \text{Irradiance}_{\text{Min}}} \right) \quad \textbf{2}$$

The results of the repeatability tests are provided in Table 12. The repeatability at all five test plane locations was ±0.11% or better, well within the ±1% design specification.

2.4.3 Test System Automation Development

Spire developed automation for testing modules with a sun simulator, a hi-pot tester, and a ground continuity tester. The equipment automatically transports, aligns, probes, and tests modules. The integrated test system, designated the SPI-MODULE QA^{TM} 350, was designed to handle module sizes ranging from a minimum of 30 cm x 91 cm (12” x 36”) to a maximum of 102 cm x 162 cm (40” x 64”). Spire will offer a series of equipment models, designed to handle different module size ranges, to suit manufacturers’ requirements.

Mechanical, pneumatic, electrical, and software systems were developed for the test system. A long motorized belt drive system was initially considered for transporting modules through the sun simulator. The high materials cost of this design led us to search for a less expensive alternative. A pneumatic actuator was identified and selected that has sufficient stroke (218 cm) for this application and costs significantly less than the belt drive approach.

The integrated test system, shown in Figure 23, includes the following major components:

- an input conveyor with a module aligner
- test probes and electronics for module hi-pot and ground continuity tests
- a sun simulator with test probes for module performance measurements (I-V curves)
- two transport carriages that work in tandem to move modules from the input conveyor to the sun simulator and from the simulator to the output conveyor
- an output conveyor for unloading modules

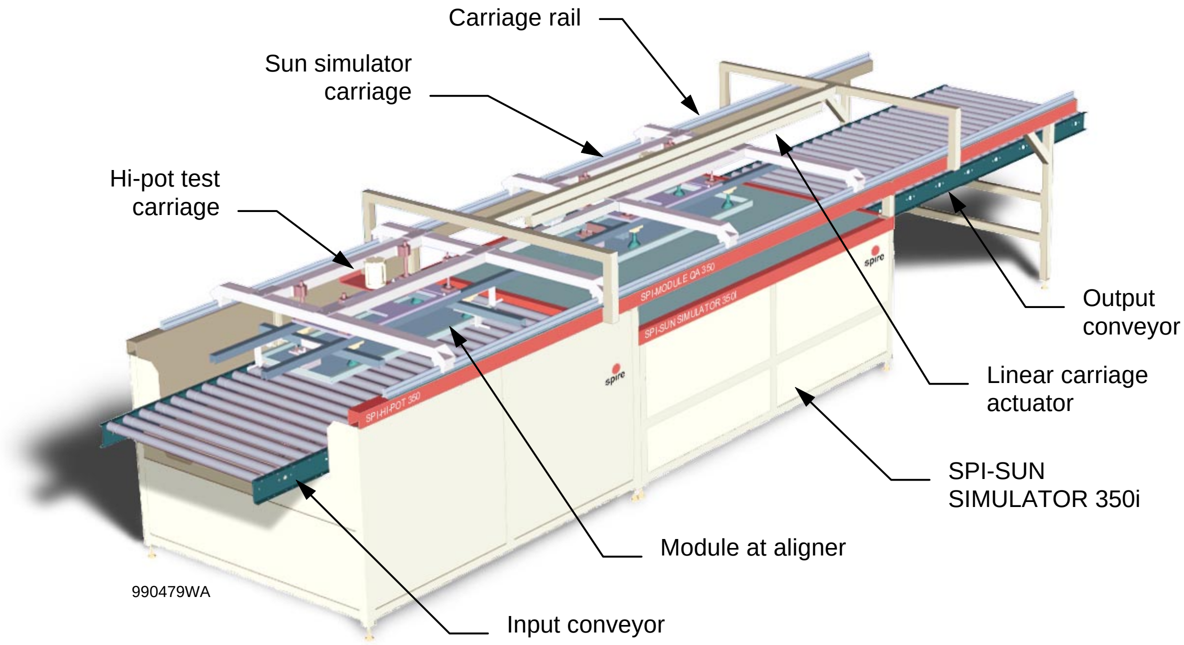

Figure 23 SPI-MODULE QA 350 integrated module test system.

Modules enter the system on a powered roller conveyor and are aligned in the first section of the machine, where the hi-pot and ground continuity tests are done. The module alignment system used here is very similar to the one developed for the automated buffer. A safety light curtain is provided around the hi-pot test area which disables the high voltage to guard against electric shock.

Side panels are provided in the hi-pot test area to reduce the ambient light on the module's front surface, to comply with ASTM E 1462, "Standard Test Methods for Insulation Integrity and Ground Path Continuity of Photovoltaic Modules."[11] Procedure 7.1.1 of this standard specifies that the face of the module shall not be illuminated during the hi-pot test. Note that the comparable UL standard, 1703, and the comparable International Standard, IEC 1215, have no requirement for shading the module.

Spire contacted Carl Osterwald at NREL to discuss the shading issue. The module's positive and negative leads are shorted during the hi-pot test. If a module is illuminated with the intensity of full sunlight and one cell is reverse biased, the cell could have the voltage of the remaining cells in series applied to it. This voltage is typically around 20 V, much less than the test voltage, which is usually in the range of 2000 V. Thus the error in applied voltage for a reverse biased cell could be on the order of 1% in full sunlight. Room lighting, however, is typically only 5% of the intensity of sunlight, and a downwardfacing module will receive only a small fraction of room lighting on its active surface. Thus the design of our automated system is sufficient to reduce the incident light on the module face to the point where it will have a negligible effect on the test.

The hi-pot test carriage assembly is shown in Figure 24. Once a module is aligned on the input conveyor, an air cylinder brings four vacuum cups down into contact with the back surface of the module. Two spring-loaded probes make contact with the positive and negative terminals on the back of the module. The module is lifted above the conveyor surface and four air-actuated probes contact the module's four frame sections. The hi-pot test is performed, the test probes are electrically reconfigured, and the ground continuity test is performed.

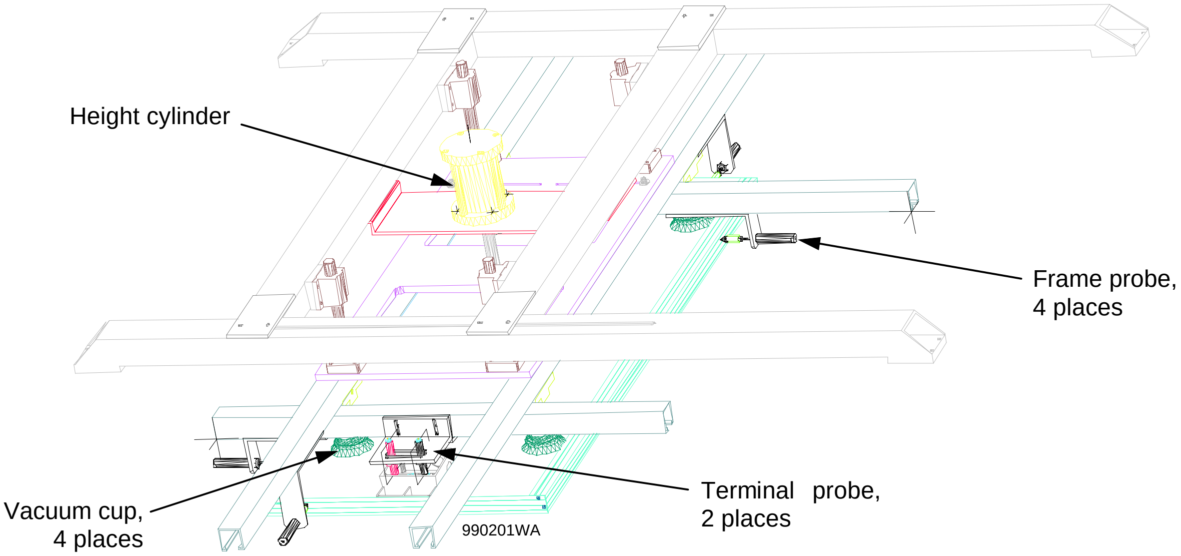

Figure 24 Hi-pot test carriage assembly.

After testing, the frame probes retract, the carriage actuator moves the hi-pot tester carriage over the sun simulator, and the module is placed on the simulator test surface. The vacuum is released, the carriage moves up, and the hi-pot tester carriage moves back to its original position.

The sun simulator carriage is shown in Figure 25. When a module has been placed on the simulator, the simulator carriage's air cylinder brings four spring-loaded probes (+V, +I, -V, -I) down into contact with the positive and negative terminals on the back of the module. The simulator measures the module's I-V curve under one sun conditions (100 mW/cm^2, AM1.5 Global spectrum).

After the simulator test is completed, the module is lifted from the simulator surface with four vacuum cups that contact the back surface of the module. The simulator carriage then moves the module from the simulator to the discharge conveyor at the same time as the next module is brought into the simulator by the hi-pot test carriage.

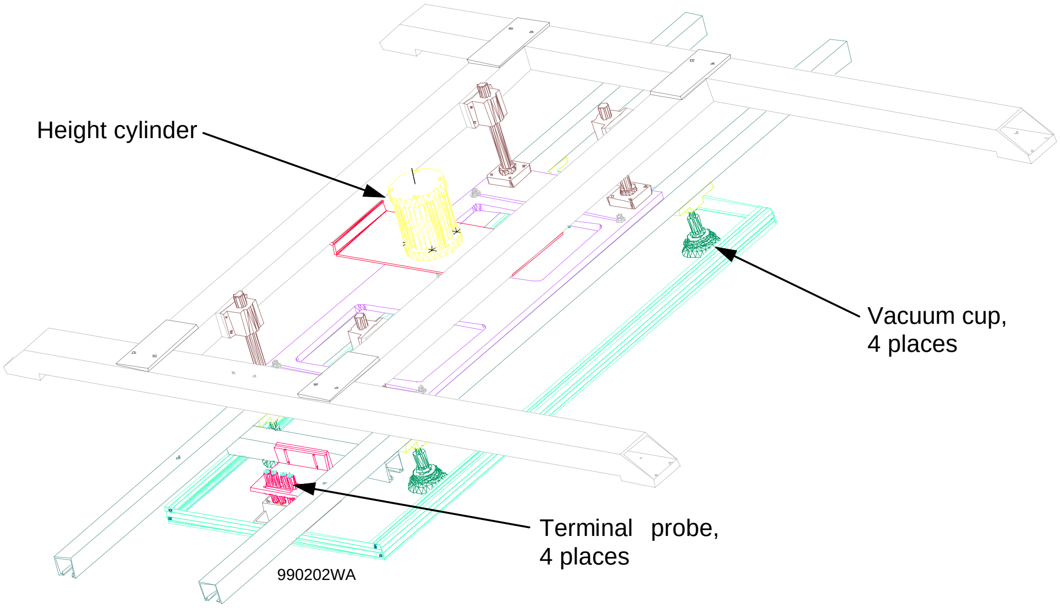

Figure 25 Sun simulator carriage assembly.

Both carriage assemblies are designed with the flexibility to accommodate module sizes from 30 cm x 91 cm to 102 cm x 162 cm. The carriages are mounted on ball bearing slides that ride on precision rails. The position of the carriages can be adjusted so they are centered over the modules in their aligned position. The vacuum cups, terminal probes, and frame probes can be adjusted in both x and y directions to suit the module design. If frameless modules are being tested, the frame probes can be replaced by a test frame that surrounds the module edges to allow hi-pot testing.

A new 32-bit Visual Basic software package was developed for test system operation using a personal computer (PC). This software operates the sun simulator, the hi-pot tester, and the ground continuity tester, acquires and analyzes module test data, and controls module alignment, transport, and probing. This integrated software approach simplifies the control system and allows the operator to deal with a single user interface. An image of the main operating screen is shown in Figure 26.

A help file was written for the test system PC in HTML format. The help file is accessible from within the testing program by pressing the F1 key or selecting Help from the menu bar.

The software that runs the hi-pot and ground continuity tests also acquires test data and stores it in a database file. The database format is compatible with Microsoft Access and Excel. Serial (RS-232) communications between a PC and the hi-pot/ground tester electronics were established and tested. Both the communications and the test electronics function properly.

The hi-pot and ground continuity test parameters listed in Table 13 can be set by the user to configure the tests for the desired set points and acceptance levels. Parameter sets can be saved as parameter files (*.par) and reloaded as needed, allowing different test conditions to be assigned to different module types.

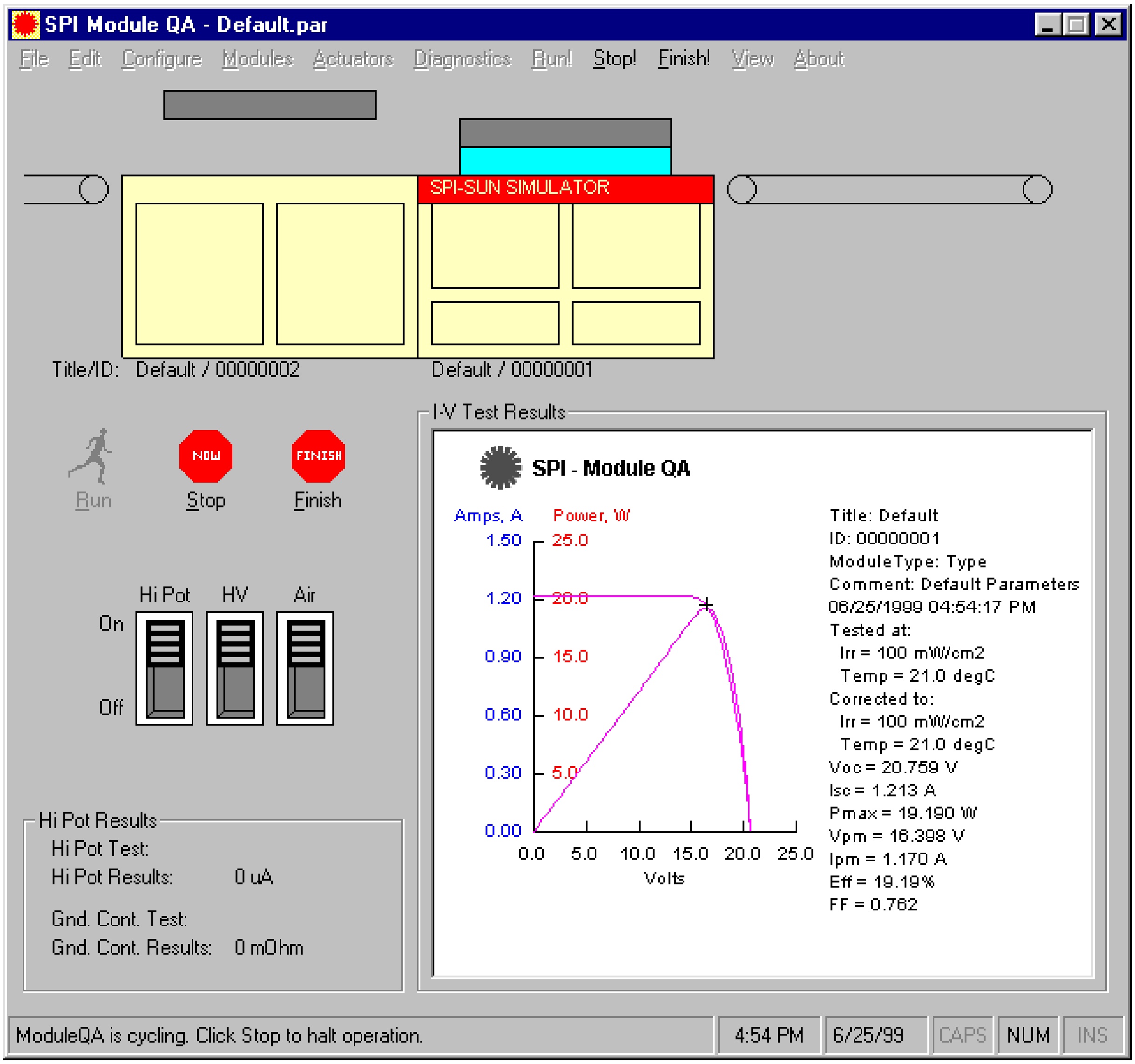
SPI Module QA - Default.par
File Edit Configure Modules Actuators Diagnostics Run! Stop! Finish! View About
SPI-SUN SIMULATOR
NOW
FINISH
Run
Stop
Finish
Hi Pot
HV
Air
On
Off
I-V Test Results
SPI - Module QA
Amps, A
Power, W
1.50
1.20
0.90
0.60
0.30
0.00
25.0
20.0
15.0
10.0
5.0
0.0
5.0
10.0
15.0
20.0
25.0
Volts
4:54 PM
6/25/99
CAPS
NUM
INS

Title/ID: Default / 00000002

Default / 00000001

Hi Pot Results

Hi Pot Test:

Hi Pot Results: 0 uA

Gnd. Cont. Test:

Gnd. Cont. Results: 0 mOhm

Title: Default
ID: 00000001
ModuleType: Type
Comment: Default Parameters
06/25/1999 04:54:17 PM
Tested at:
Irr = 100 mW/cm2
Temp = 21.0 degC
Corrected to:
Irr = 100 mW/cm2
Temp = 21.0 degC
Voc = 20.759 V
Isc = 1.213 A
Pmax = 19.190 W
Vpm = 16.398 V
Ipm = 1.170 A
Eff = 19.19%
FF = 0.762

ModuleQA is cycling. Click Stop to halt operation.

Figure 26 **Main operating screen, SPI-MODULE QA 350, with I-V data measured by a sun simulator.**

Table 13 User selectable parameters for hi-pot and ground continuity tests.

Hi-Pot	Ground Continuity
Voltage (V)	Current (A)
Current Limit (μA)	Voltage (V)
Ramp Time (s)	Resistance Limit (mΩ)
Dwell Time (s)	Dwell Time (s)

A diagnostics screen was created with buttons that run the hi-pot and ground continuity tests individually and fields that display the test results. The hi-pot test reports the pass/fail status, the applied test voltage (V), and the maximum leakage current (μA) measured during the test. The ground continuity test reports the pass/fail status, the applied test current (A), and the resistance (mΩ) measured during the test.

A bar code reader was added to the test system for automatically tracking modules by serial number and inserting test data into a database. Information on bar code readers was obtained from several vendors and reviewed. A reader with serial communications capability was selected, procured, and mounted on the hi-pot test carriage. Serial numbers are read from bar code labels on the backs of modules and sent to the test system PC, which inserts the serial numbers along with the test data in records that are saved in a database file.

3 CONCLUSIONS

Spire has completed the first phase of a three-phase program for developing new automated post-lamination processes for PV module manufacturing. These processes are applicable to a very broad range of module types, including those made with wafer-based and thin-film solar cells. No off-the-shelf automation was available for these processes prior to this program.

Spire conducted a survey of PV module manufacturers to identify current industry practices and to determine the requirements for the automated systems being developed in this program. Survey data and input from module manufacturers gathered during site visits was used to define system capabilities and specifications for post-lamination automation processes.

Spire completed detailed mechanical and electrical designs and developed software for two prototype automation systems: a module buffer storage system, designated the SPI-BUFFER 350, and an integrated module testing system, designated the SPI-MODULE QA 350. Both systems were fabricated, tested, and evaluated with module components from several module manufacturers. The buffer storage system aligns and transfers laminates or modules from a conveyor to a cart and back again, as required by the availability of upstream and downstream processes. The test system aligns and probes modules, performs electrical isolation and ground continuity tests, and transports modules through a sun simulator, where their current-voltage curves are measured. New specification sheets, included in Appendix A, were produced to market these systems to the PV industry.

A new size simulator, the SPI-SUN SIMULATOR 350i, was designed with a test area that can handle most production modules without consuming excessive production floor space. Orders for two 350i simulators were received by Spire from PV module manufacturers, one in the US and one in Japan. Thus two of these new machines, in addition to the simulator built for the PVMaT program, were built and delivered during Phase 1. A new specification sheet, included in Appendix A, was produced to market this machine to the PV industry.

Module edge trimming, edge sealing, and framing processes that are suitable for automation were developed and demonstrated by Spire's subcontractor, ARRI. Spire and ARRI collaborated to define concepts for implementing these processes in production. These concepts form a solid basis for developing prototype production trimming, sealing, and framing systems, the objective of Spire's work in Phase 2. The development of automated processes and a prototype system for junction box installation is planned for Phase 3. A team collaboration, comprising Spire, ARRI, and PV manufacturers, will assist the development work in Phase 3.

The automated processes under development throughout this program are being designed to be combined together to create automated production lines. An example of such a line is shown in Figure 27. The processes are designed to be modular, so they can be arranged in the order required by the module manufacturer. The use of microprocessor controllers (PLCs or PCs) allows real time product tracking and test data acquisition. Bar codes on the backs of modules can be used with scanners to track and assign data to individual modules by serial number.

A cost study was done by ARRI to determine the level of investment that can be justified by implementing automation for post-lamination assembly and testing processes. The study concluded that a module production line operating two shifts per day and producing 10 MW of modules per year can justify $2.37 million in capital equipment, assuming a 5 year pay back period.

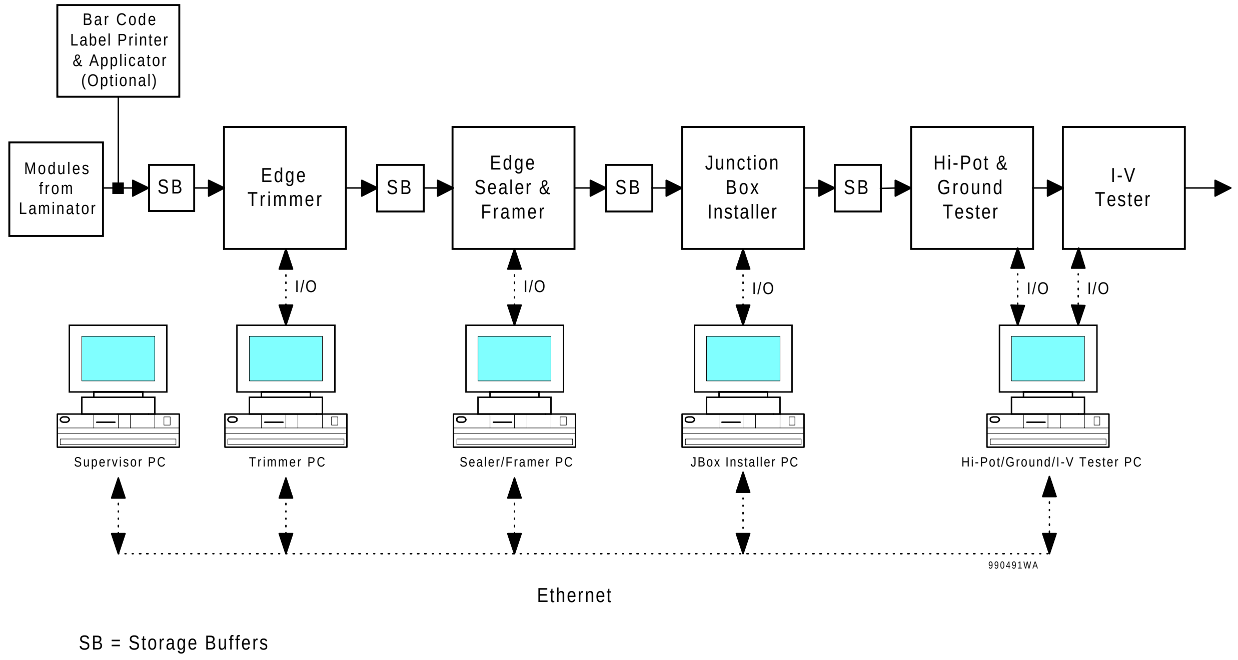
Bar Code Label Printer & Applicator (Optional)
Modules from Laminator
SB
Edge Trimmer
SB
Edge Sealer & Framer
SB
Junction Box Installer
SB
Hi-Pot & Ground Tester
I-V Tester
I/O
I/O
I/O
I/O
I/O
Supervisor PC
Trimmer PC
Sealer/Framer PC
JBox Installer PC
Hi-Pot/Ground/I-V Tester PC
990491WA
Ethernet
SB = Storage Buffers

Figure 27 An example of an automated module production line with a network for product tracking and data acquisition.

4 REFERENCES

1. M. J. Nowlan and W. G. Kurth, “Design Definition for Post-Lamination Process Automation for Photovoltaic Modules,” Spire document No. Design-10182, October, 1998, deliverable No. D-1.2.1.

2. Maycock, P. D., *PV News*, **17**, No. 2 (1998) 2.

3. M. J. Nowlan, “Results of a Photovoltaic Industry Survey on Post-Lamination Module Assembly and Testing,” Spire document No. Survey-10182, September, 1998, deliverable No. D-1.2.1.

4. M. J. Nowlan, W. G. Kurth, T. D. Harmon, T. W. McCormick, J. M. Murach, W. F. Breen, S. J. Hogan, M.R. Diver, M. I. Symko, and S. R. Rummel, “A Photovoltaic Industry Survey on Post-Lamination Module Manufacturing,” *NCPV Photovoltaics Program Review; Proceedings of the 15th Conference,* Denver, CO, September, 1998; AIP Conference Proceedings 462 (1999) 725.

5. UL 1703 Standard for Safety, “Flat-Plate Photovoltaic Modules and Panels,” Northbrook, IL, Underwriters Laboratory, Inc., 1993.

6. M. R. Diver, “A Cost Comparison of Manual vs. Automated Methods for PV Module Lamination, Trimming, Framing, and Testing,” UTA ARRI report, January 24, 1999; program deliverable No. D-1.3.5.

7. European Standard EN 60204-1, “Safety of Machinery - Electrical Equipment of Machines, Part 1: General Requirements,” European Committee for Electrotechnical Standardization (1992).

8. SMEMA Interface Standard 1.2, Surface Mount Equipment Manufacturers Association, Lafayette Hill, PA (1993).

9. Tedlar is a registered trademark of DuPont for its polyvinyl fluoride (PVF) films.

10. ASTM E 927, “Standard Specification for Solar Simulation for Terrestrial Photovoltaic Testing,” Annual Book of ASTM Standards, Vol. 12.02, American Society for Testing and Materials (1997) 501.

11. ASTM E 1462, “Standard Test Methods for Insulation Integrity and Ground Path Continuity of Photovoltaic Modules,” Annual Book of ASTM Standards, Vol. 12.02, American Society for Testing and Materials (1997) 751.

APPENDIX A

New Product Specification Sheets

SPI-SUN SIMULATOR^{TM} 350i

SPI-MODULE QA^{TM} 350

SPI-SUN SIMULATOR™ 350i

Photovoltaic Module Tester

The SPI-SUN SIMULATOR™ 350i tests photovoltaic modules under simulated Air Mass 1.5 Global terrestrial conditions. The system's unique upward-facing illumination and low height make it ideal for incorporation into an automated module assembly line by eliminating the need to turn modules over for testing.

A filtered, repetitively pulsed xenon light source closely matches the solar spectrum while avoiding the excessive solar cell heating associated with continuous sources. The spectrum is carefully filtered to meet ASTM and International spectral distributions (ASTM E927 Class A), facilitating the testing of amorphous as well as crystalline silicon materials.

A calibrated reference solar cell is coupled to the electronic circuitry to monitor illumination intensity and control pulse-to-pulse consistency. A computer-controlled electronic load automatically varies the module load to plot the I-V curve. The module temperature is measured during testing to allow temperature compensation of the I-V data. Software is operator friendly and intuitive Visual Basic running on a Windows operating system.

Features and Benefits

- Low height and upward illumination allow integration into automated module assembly lines
- Measures the following parameters:
  - *I-V curve*
  - *Open-circuit voltage*
  - *Short-circuit current*
  - *Load current and power at fixed voltage*
  - *Peak power*
  - *Current and voltage at peak power*
  - *Fill factor*
  - *Approximate series and shunt resistance*
  - *Cell and module efficiency*
  - *Module temperature*
- Uniformity of illumination ± 3% over entire test area
- Pulsed xenon light source
  - *Low duty cycle prevents module heating*
  - *Filtered to Class A spectrum*
  - *Variable intensity from 70 to 110 mW/cm^2, measured by calibrated reference cell*
- Four-wire module connection for increased measurement accuracy
- Adjustable reference cell temperature
- Computer control system with laser printer and Visual Basic software package
- Tests either crystalline or thin film (amorphous silicon) modules and cells
- CE compliant

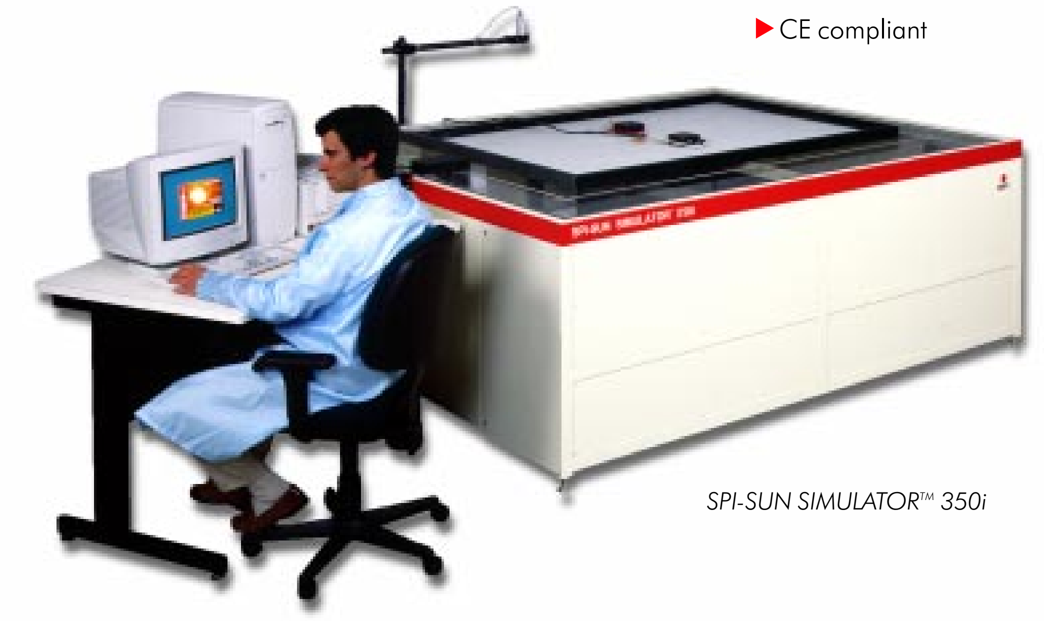

SPI-SUN SIMULATOR™ 350i

spire

Pulsed Xenon vs. AM1.5 Solar Spectrum

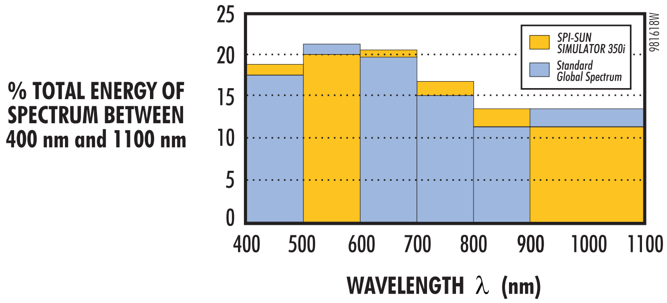

SPI-SUN SIMULATOR™ 350i Specifications

1. Maximum Module Dimensions: *(other sun simulator sizes are available)*
   Length .... *162 cm (64 in)*
   Width .... *102 cm (40 in)*

2. Light Source:
   Long-arc pulsed xenon lamp, filtered to AM1.5 Global spectrum (ASTM E892)
   Full area intensity .... *70 to 110 mW/cm²*
   Lamp lifetime, nominal .... *10,000,000 flashes*

3. Illumination Uniformity: .... *± 3% over 162 cm x 102 cm area*

4. Measurement Range:
   Voltage (three ranges) .... *0 - 100 V*
   Current (two ranges) .... *0 - 20 A*

5. Resolution: *(lowest range)*
   Voltage .... *0.0005 V*
   Current .... *0.0005 A*

6. Equipment Dimensions: *(excluding computer system and console)*
   Width .... *228 cm (90 in)*
   Depth .... *186 cm (73 in)*
   Height .... *91 cm (36 in)*

7. Equipment Weight, Net: .... *890 kg (1965 lbs)*

8. Utilities Requirements:
   Electricity .... *190 - 240 VAC, 20 A, 50/60 Hz, single phase*
   Compressed air .... *140 l/min at 275 kPa (5 scfm at 40 psi)*

Options

- *Filtered calibrated reference cell for testing amorphous silicon modules*
- *Special voltage and current ranges*
- *Multiplexer for multiple module testing*
- *Label printer with software*
- *Conveyor for module loading and unloading*
- *Automatic module electrical probing*
- *Vision system for OCR or barcode reading of module serial number*

For additional information, design and application assistance, please call, fax or email Photovoltaics Sales

© 1999 Spire Corporation, All Rights Reserved.

Preliminary Release

SPI-MODULE QA™ 350

Photovoltaic Module Tester

The SPI-MODULE QA 350 is an automated photovoltaic module testing system that combines the advanced I-V measurement capabilities of the SPI-SUN SIMULATOR™ with high voltage isolation and ground continuity testing. The integrated automation system allows for efficient module alignment, transport, probing and testing.

Modules are conveyed to the test area, then aligned and probed for both high voltage and ground continuity tests. Test probes make contact to the module's output terminals and any exposed conductive components, typically four frame members. After the high voltage test is conducted, the test probes are automatically reconfigured, and the ground continuity test is executed. Test data is collected and displayed on a personal computer (included). Test conditions are fully programmable and can be set to comply with ANSI/UL 1703, IEEE 1262, or IEC 1215 standards. A module transport carriage gently and securely moves modules from the high voltage/ground continuity test area to the SPI-SUN SIMULATOR. Large vacuum cups grip the module as the carriage moves on air driven ball bearing slides.

The SPI-SUN SIMULATOR tests photovoltaic modules under simulated Air Mass 1.5 Global terrestrial conditions. A filtered, repetitively pulsed xenon light source closely matches the solar spectrum while avoiding the excessive solar cell heating caused by continuous sources. The spectrum is carefully filtered to meet ASTM and international spectral distributions (ASTM E927 Class A), which facilitates the testing of amorphous as well as crystalline silicon materials. A four-point probe automatically contacts terminals in the module junction box or ribbon leads on the back of a module. An electronic load measures the module's I-V curve and the data is acquired, processed, and displayed on the personal computer. A second transport carriage, working in tandem with the first, moves modules from the sun simulator to a discharge conveyor. The simulator probes are mounted on this carriage, allowing I-V curves to be measured while testing high voltage and ground continuity on a new module.

Module alignment, probing, and movement through the test system is controlled by the same personal computer that controls the high voltage, ground continuity and SPI-SUN SIMULATOR tests.

Features and Benefits

- May be integrated into automated module assembly lines
- Reduces handling requirements and allows high-throughput, safe testing
- Measures the following parameters:
  - *I-V curve*
  - *Open-circuit voltage*
  - *Short-circuit current*
  - *Load current and power at fixed voltage*
  - *Peak power*
  - *Current and voltage at peak power*
  - *Fill factor*
  - *Approximate series and shunt resistance*
  - *Cell and module efficiency*
  - *Module temperature*
  - *Resistance, ground continuity test*
  - *Leakage current, high voltage test*
- Uniformity of illumination ± 3% over entire test area
- Pulsed xenon light source
  - *Low duty cycle prevents module heating*
  - *Filtered to Class A spectrum*
  - *Variable intensity from 70 to 110 mW/cm², measured by calibrated reference cell*
- Four-point module connection for increased measurement accuracy
- Adjustable probe and vacuum cup positions
- Calibrated reference cell with temperature control
- Computer control system with laser printer and Visual Basic software package
- Can test either crystalline or thin film (amorphous silicon) modules

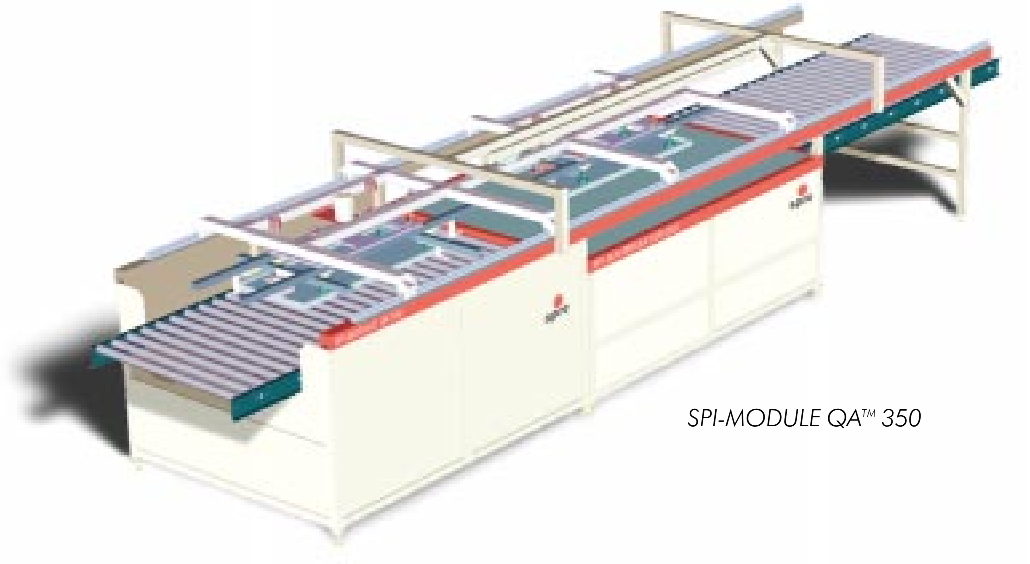

SPI-MODULE QA™ 350

spire

Pulsed Xenon vs. AM1.5 Solar Spectrum

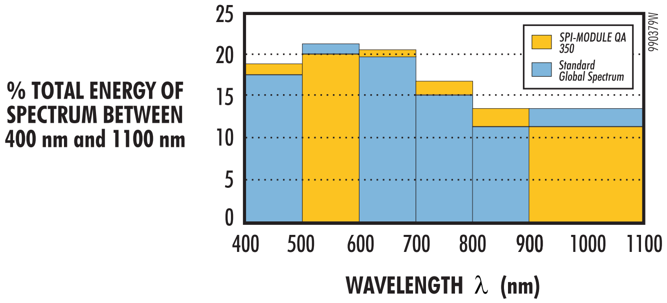

SPI-MODULE QA™ 350 Specifications

1. Module Dimensions: *(larger sizes also standard)*
   Minimum .... 30 x 91 cm (12 x 36 in)
   Maximum .... 102 x 162 cm (40 x 64 in)
2. SPI-SUN SIMULATOR Light Source:
   Long-arc pulsed xenon lamp, filtered to AM 1.5 Global spectrum (ASTM E892)
   Full area intensity .... 70 to 110 mW/cm^2
   Lamp lifetime, nominal .... 10,000,000 flashes
3. SPI-SUN SIMULATOR Illumination Uniformity: .... *± 3% over 102 cm x 164 cm area*
4. SPI-SUN SIMULATOR Measurement Range:
   Voltage (three ranges) .... 0 - 100 V
   Current (two ranges) .... 0 - 20 A
5. SPI-SUN SIMULATOR Resolution: *(lowest range)*
   Voltage .... 0.0005 V
   Current .... 0.0005 A
6. High Voltage Tester:
   Voltage .... 0 - 6000 V DC
   Current Limit .... 0.0 - 999.9 µA
7. Ground Continuity Tester:
   Current .... 3.00 - 30.00 A AC
   Resistance Limit .... 0 - 600 mΩ
8. Equipment Dimensions: *(excluding computer system and console)*
   Width .... 655 cm (258 in)
   Depth .... 198 cm (78 in)
   Height .... 259 cm (102 in)
9. Equipment Weight:
   Automation (estimated) .... 680 kg (1500 lbs)
   SPI-SUN SIMULATOR .... 890 kg (1965 lbs)
10. Utilities Requirements, Electricity:
    Automation (estimated) .... 190 - 240 VAC, 20 A, 50/60 Hz, single phase
    SPI-SUN SIMULATOR .... 190 - 240 VAC, 30 A, 50/60 Hz, single phase
11. Utilities Requirements, Compressed air:
    Automation (estimated) .... 550 - 700 kPa (80 - 100 psi)
    SPI-SUN SIMULATOR .... 140 l/min at 275 kPa (5 scfm at 40 psi)

Options

- *Filtered calibrated reference cell for testing amorphous silicon modules*
- *Special voltage and current ranges*
- *Label printer with software*
- *Barcode reader for automatic module serial number recognition*
- *Fixture for testing frameless modules*

For additional information, design and application assistance, please call, fax or email Photovoltaics Sales

© 1999 Spire Corporation, All Rights Reserved.

REPORT DOCUMENTATION PAGE

Form Approved
OMB NO. 0704-0188

Public reporting burden for this collection of information is estimated to average 1 hour per response, including the time for reviewing instructions, searching existing data sources, gathering and maintaining the data needed, and completing and reviewing the collection of information. Send comments regarding this burden estimate or any other aspect of this collection of information, including suggestions for reducing this burden, to Washington Headquarters Services, Directorate for Information Operations and Reports, 1215 Jefferson Davis Highway, Suite 1204, Arlington, VA 22202-4302, and to the Office of Management and Budget, Paperwork Reduction Project (0704-0188), Washington, DC 20503.

1. AGENCY USE ONLY (Leave blank)

2. REPORT DATE
August 1999

3. REPORT TYPE AND DATES COVERED
Annual Technical Progress Report, 15 April 1998 – 14 June 1999

4. TITLE AND SUBTITLE
Post-Lamination Manufacturing Process Automation for Photovoltaic Modules; Annual Technical Progress Report, 15 April 1998 – 14 June 1999

5. FUNDING NUMBERS
C: ZAX-8-17647-04
TA: PV906101

6. AUTHOR(S)
M.J. Nowlan, J.M. Murach, T.W. McCormick, E.R. Lewis, and S.J. Hogan

7. PERFORMING ORGANIZATION NAME(S) AND ADDRESS(ES)
Spire Corporation
One Patriots Park
Bedford, MA 01730-2396

8. PERFORMING ORGANIZATION REPORT NUMBER

9. SPONSORING/MONITORING AGENCY NAME(S) AND ADDRESS(ES)
National Renewable Energy Laboratory
1617 Cole Blvd.
Golden, CO 80401-3393

10. SPONSORING/MONITORING AGENCY REPORT NUMBER
SR-520-27058

11. SUPPLEMENTARY NOTES
NREL Technical Monitor: M. Symko-Davies

12a. DISTRIBUTION/AVAILABILITY STATEMENT
National Technical Information Service
U.S. Department of Commerce
5285 Port Royal Road
Springfield, VA 22161

12b. DISTRIBUTION CODE

13. ABSTRACT *(Maximum 200 words)*

This report describes work performed by Spire Corporation during Phase 1of this three-phase PVMaT subcontract to develop new automated post-lamination processes for PV module manufacturing. These processes are applicable to a very broad range of module types, including those made with wafer-based and thin-film solar cells. No off-the-shelf automation was available for these processes prior to this program. Spire conducted a survey of PV module manufacturers to identify current industry practices and to determine the requirements for the automated systems being developed in this program. Spire also completed detailed mechanical and electrical designs and developed software for two prototype automation systems: a module buffer storage system, designated the SPI-BUFFER 350, and an integrated module testing system, designated the SPI-MODULE QA 350. Researchers fabricated, tested, and evaluated both systems with module components from several module manufacturers. A new size simulator, the SPI-SUN SIMULATOR 350i, was designed with a test area that can handle most production modules without consuming excessive floor space. Spire's subcontractor, the Automation and Robotics Research Institute (ARRI) at the University of Texas, developed and demonstrated module edge trimming, edge sealing, and framing processes that are suitable for automation. The automated processes under development throughout this program are being designed to be combined together to create automated production lines. ARRI completed a cost study to determine the level of investment that can be justified by implementing automation for post-lamination assembly and testing processes. The study concluded that a module production line operating two shifts per day and producing 10 MW of modules per year can justify $2.37 million in capital equipment, assuming a 5-year payback period.

14. SUBJECT TERMS
photovoltaics ; Photovoltaic Manufacturing and Technology ; PVMaT ; post-lamination module manufacturing ; modules ; solar cells ; thin films ; process automation

15. NUMBER OF PAGES

16. PRICE CODE

17. SECURITY CLASSIFICATION OF REPORT
Unclassified

18. SECURITY CLASSIFICATION OF THIS PAGE
Unclassified

19. SECURITY CLASSIFICATION OF ABSTRACT
Unclassified

20. LIMITATION OF ABSTRACT
UL

NSN 7540-01-280-5500

Standard Form 298 (Rev. 2-89)
Prescribed by ANSI Std. Z39-18
298-102